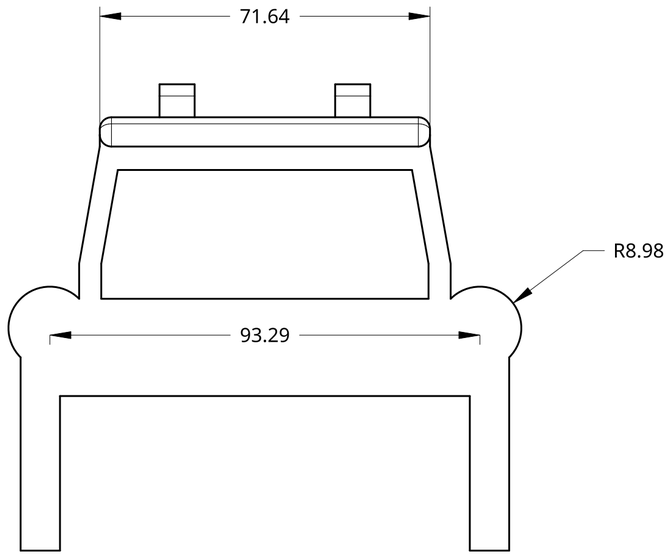

FRONT VIEW

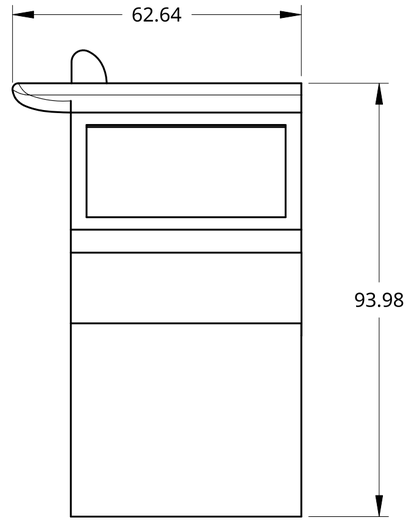

RIGHT SIDE VIEW

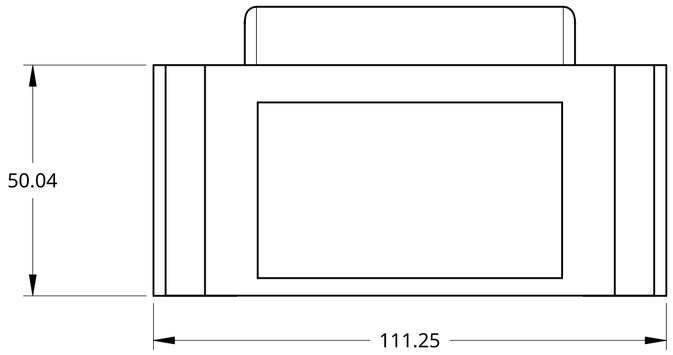

TOP VIEW

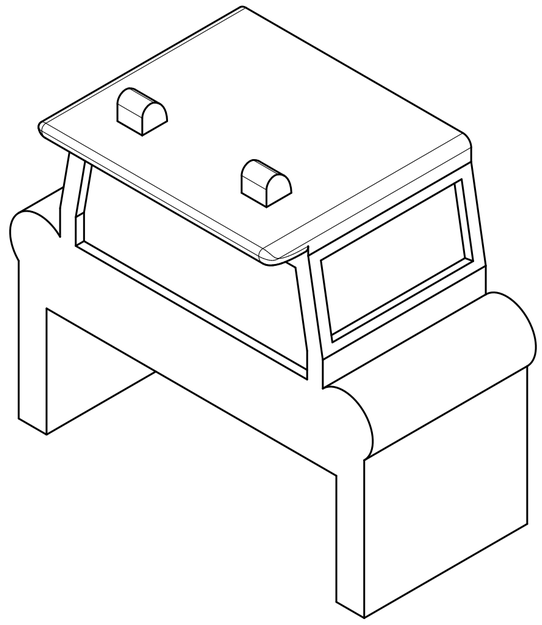

ISOMETRIC VIEW

COMPANY NAME:	NAME:	ACTIVITY NO. / ACTIVITY NAME:	DESIGNED BY:	REVISIONS:	DATE:	SUBMITTED TO:	SHEET CONTENTS:	SHEET NUMBER:
BATANGAS STATE UNIVERSITY The National Engineering University	**COMPANY 4 - CARTESIAN MANIPULATOR**	**Task 3: 2D and 3D Design of Mobile Articulated Manipulator Robot**	**RAYNIEL LESTER PINEDA**			**ENGR. MIKKO DE TORRES**	**Part 1 of Mobile Articulated Manipulator Robot** All units are in millimeters.	2 OUT OF 3
	PROGRAM: BS MECHATRONICS ENGINEERING ECE 415 - MICROPROCESSOR AND MICROCONTROLLER SYSMTEMS AND DESIGN		CADD BY: **BRYAN EVANGELISTA**					
			CHECKED BY: **ENGR. MIKKO DE TORRES**					
			DATE: **JULY 24, 2023**					