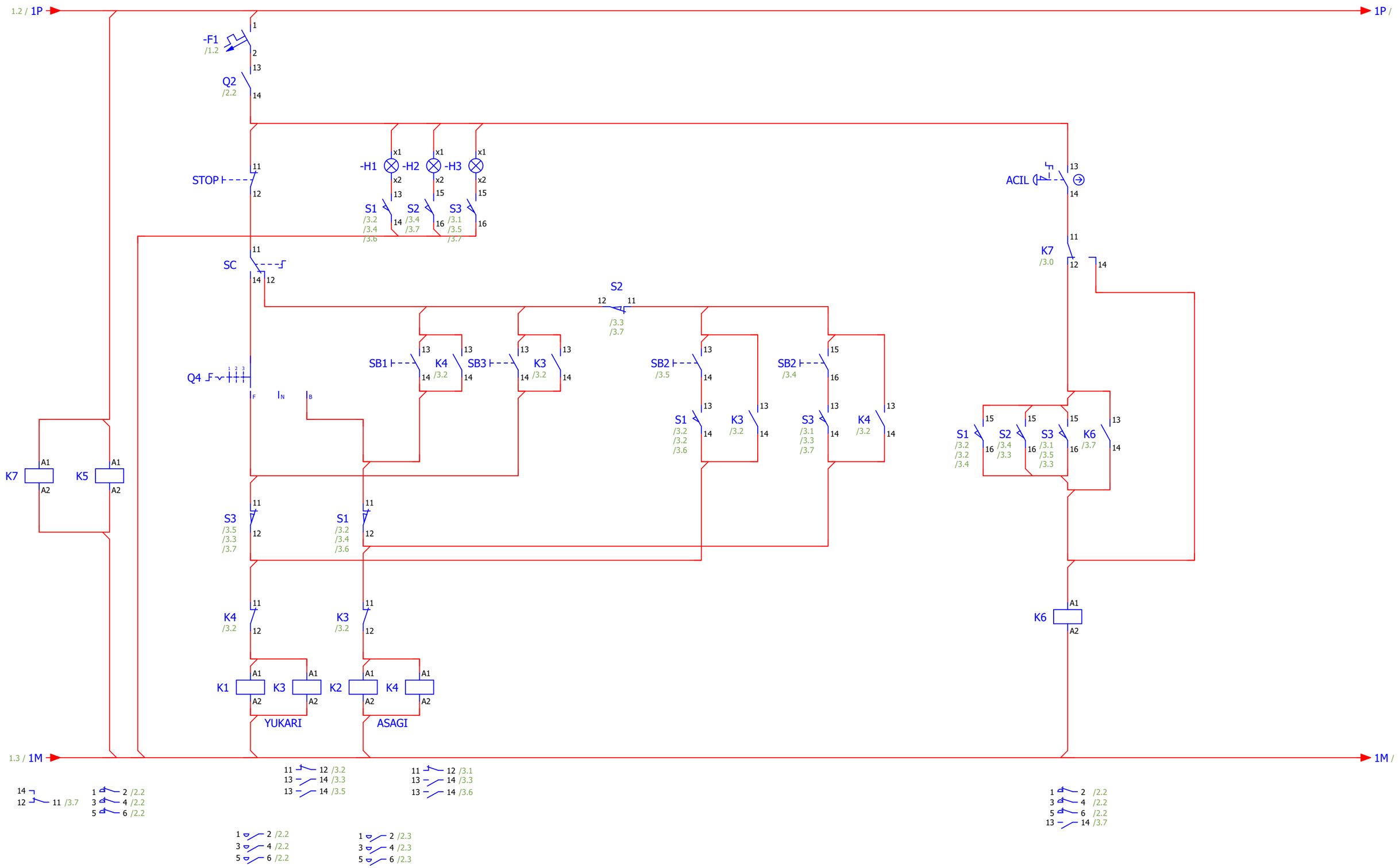

2

			Date	8/21/2025	EPLAN	EPLAN Software & Service GmbH & Co. KG	control 24V		=	
			Ed.	YUNUS.TOSUN	Project template with identification structure in accordance with IEC standard: Page structure		with higher-level function and mounting location		+	
			Appr.					IEC_tpl001	Page	3
Modification	Date	Name	Original		Replacement of	Replaced by			Page	3 / 3