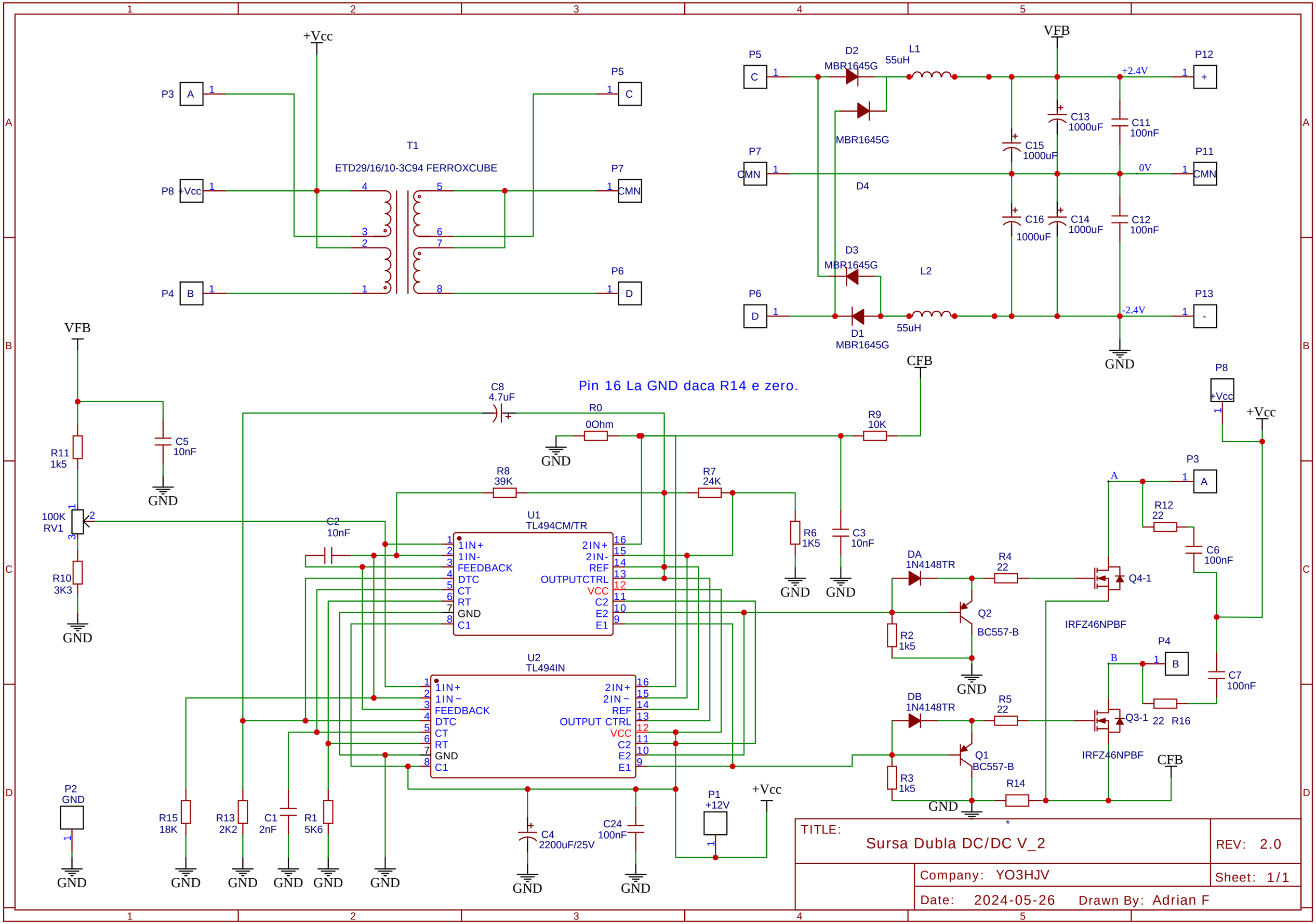
+Vcc
P3 A
P8 +Vcc
P4 B
T1
ETD29/16/10-3C94 FERROXCUBE
P5 C
P7 CMN
P6 D
VFB
P5 C
D2 MBR1645G
L1 55uH
MBR1645G
P7 CMN
D4
D3 MBR1645G
L2
P6 D
D1 MBR1645G
55uH
C13 1000uF
C11 100nF
C15 1000uF
C16 1000uF
C14 1000uF
C12 100nF
+2.4V
0V
-2.4V
P12 +
P11 CMN
P13 -
GND
CFB
Pin 16 La GND daca R14 e zero.
C8 4.7uF
R0 0Ohm
R9 10K
P8 +Vcc
R11 1k5
C5 10nF
100K RV1
R10 3K3
R8 39K
R7 24K
R6 1K5
C3 10nF
C2 10nF
U1 TL494CM/TR
1IN+
1IN-
FEEDBACK
DTC
CT
RT
GND
C1
2IN+
2IN-
REF
OUTPUTCTRL
VCC
C2
E2
E1
U2 TL494IN
1IN+
1IN−
FEEDBACK
DTC
CT
RT
GND
C1
2IN+
2IN−
REF
OUTPUT CTRL
VCC
C2
E2
E1
DA 1N4148TR
R4 22
Q2 BC557-B
R2 1k5
DB 1N4148TR
R5 22
Q1 BC557-B
R3 1k5
R14
Q4-1
Q3-1
IRFZ46NPBF
IRFZ46NPBF
P3 A
R12 22
C6 100nF
P4 B
C7 100nF
22 R16
P2 GND
R15 18K
R13 2K2
C1 2nF
R1 5K6
C4 2200uF/25V
C24 100nF
P1 +12V
+Vcc
GND
TITLE:
Sursa Dubla DC/DC V_2
REV: 2.0
Company: YO3HJV
Sheet: 1/1
Date: 2024-05-26
Drawn By: Adrian F