# STRUCTURES: Conceptual review

## 1 Overall Structural Overview

Sky-Sailor is a 3.2 m span solar UAV (2.44 kg total mass) designed for continuous 24+ hour flight. Because solar endurance requires extremely low wing loading, very high aspect ratio, minimal structural mass and large surface area for solar cells. The wing becomes the primary structural element, the solar energy support structure and the main bending load carrier. Thus, the structural design is governed by maximize stiffness-to-weight ratio, while keeping wing surface density as low as possible. Chapter 3 in [1] shows that structural weight dominates scaling, so the wing structure must be optimized at the conceptual level.

## 2 Wing Configuration and Structure

According to Chapter 5 in [1], the wing is high aspect ratio. The wing is divided into 3 detachable parts, eft panel, center panel and right panel, keeping in mind the transportability, structural modularity, solar module wiring management, assembly practicality and reduced bending stress at transport joints. The center section carries, fuselage attachment, solar electrical interconnection and main structural continuity.

### 2.1 Internal Wing Structure

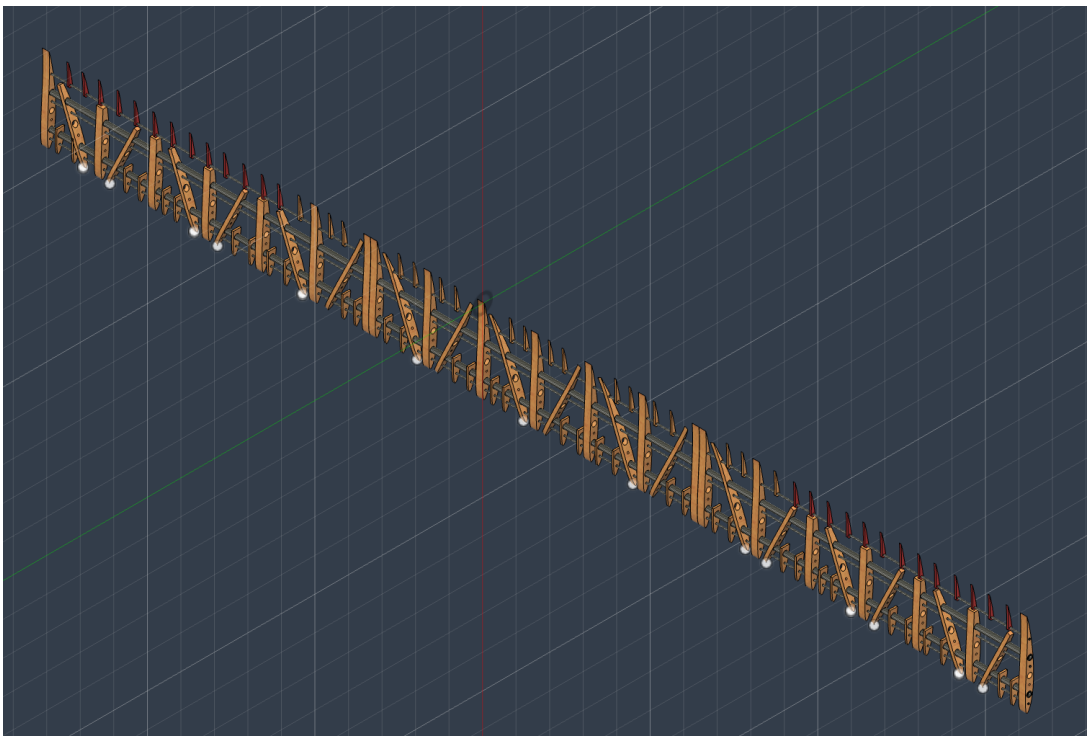

Figure 1: Snapshot of the Assembly of wing structure including the non load bearing substructures.

The wing is a lightweight composite beam with ribbed internal structure, composed of main Spar (primary ending element) whose function is includes lift-induced bending moments, shear loads and wing root

bending stress. There is only spar, because weight must be minimized, airfoil thickness is limited and bending moment dominates (not torsion). In high aspect ratio sailplane-like wings, the main spar typically carries ∼90% of bending.
Bending moment at root:

$$M_{root} \approx \frac{Wb}{4}$$

For low-mass aircraft, material efficiency must be extremely high. Thus, high modulus carbon fiber is used, spar caps sized for tension/compression and web sized for shear.

Next comes the secondary spar (rear spar) which is much lighter. Its function is to control surface hinge support, torsional rigidity and supprot solar panel. We do not have a closed torque box, because solar cells require flat upper surface, manufacturing simplicity and mass constraints. Instead, partial D-box effect near leading edge and rear spar provides torsion stiffness.

Next we have ribs. Ribs define the WE3.55-9.3 airfoil. It function is to maintain airfoil geometry, transfer distributed loads to spars, support solar skin and prevent buckling of upper surface. We have placed ribs with high rib density, approximately 1 rib every ∼40-60 mm. 56 ribs total across 3.2 m span. The reason for so many ribs is because, solar cells require flat, non-buckling surface, thin airfoil (∼9.3% thickness), lightweight skin cannot span large gaps and to avoid local buckling under compression.

Then we have leading edge structure. The leading edge forms a semi-D structure. Its function is to provides torsional rigidity, resists aerodynamic twist and protects airfoil nose. Without sufficient torsion stiffness would cause aeroelastic divergence and solar panel cracking.

$$\theta_{twist} \propto \frac{M_{torsion}}{GJ}$$

Finally we the skin which is ultra-light film or composite sheet, covered by encapsulated silicon solar cells. The skin (structural role) acts as shear diaphragm, torsional stiffness contributor and load distributor, but it is NOT load-bearing in bending.

## 2.2 Airfoil selection

Airfoil used is **WE3.55-9.3**.

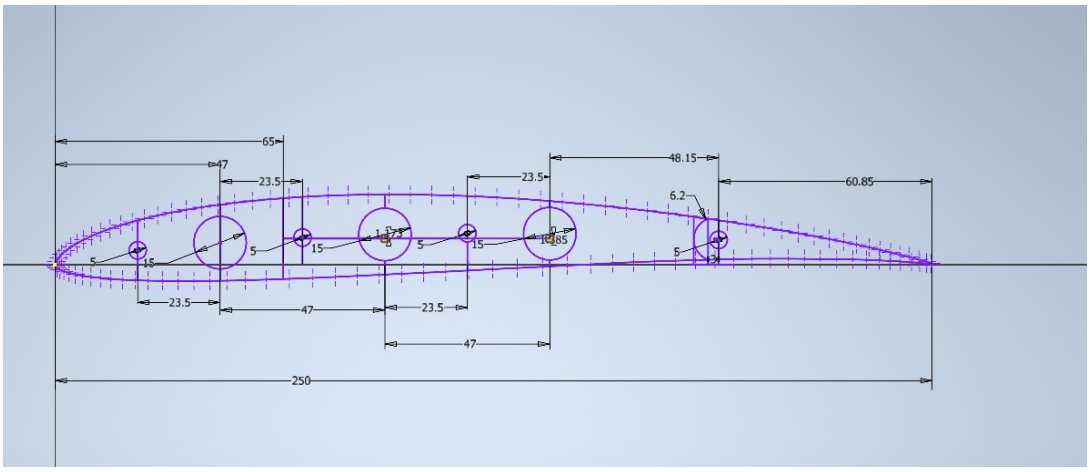


Figure 2: Engineering drawing of of WE3.55-9.3 airfoil

The thickness is ≈ 9.3%, optimized for low Reynolds number and has good lift-to-drag ratio at low wing loading. The camber of the airfoil is 3.55%. A NACA 4409 (4% camber, 9% thickness) or NACA 3409 (3% camber, 9% thickness) would share very similar geometric proportions to the WE3.55-9.3.

Its structural implications: are thin airfoil limited spar height, limited spar height → higher stress and higher stress → need high-modulus carbon. Because bending stress:

$$\sigma = \frac{My}{I}$$

and $I$ is proportional to thickness$^3$. Thus thin airfoil forces stronger spar caps, more ribs and careful material choice.

# 3 Other Sub-structures

## 3.1 Struts and Bracing

Unlike some HALE aircraft, Sky-Sailor has no external struts, because, added drag reduces endurance, solar area must remain unobstructed, small scale aircraft → bending manageable internally and composite spar sufficient for 2.44 kg aircraft.

## 3.2 Tail Booms

The aircraft uses twin tail booms. Twin booms reduce weight compared to conventional fuselage tail, allows rear prop configuration, lower bending load in boom and smaller vertical tail moment arm mass penalty. Single boom has larger diameter and is heavier but twin booms share load, improve torsional stability and enable lighter tailplane.

## 3.3 Control Surface Structure

Ailerons are integrated into outer wing. Rear spar supports hinge loads, control horns integrated in rib structure and thin trailing edge reinforced locally. So, there are 2 ailerons, that is one per wing.

# 4 Summary of Substructures

| **Substructure** | **Approx Count** | **Purpose** | **Why That Number** |
|---|---|---|---|
| Main Spar | 1 | Carry bending | Weight minimization |
| Rear Spar | 1 | Torsion + hinge support | Required for stiffness |
| Ribs | ∼50-60 | Shape + skin support | Prevent buckling |
| Wing Panels | 3 | Transport & modularity | Structural practicality |
| Tail Booms | 2 | Tail support | Weight optimization |
| Ailerons | 2 | Roll control | Conventional layout |
| Solar Panels | Multiple strips | Energy generation | Spanwise coverage |

# 5 Structural Design Optimization Logic

Structural mass must be minimized because, increasing mass causes:

Higher required lift → Higher drag → More power → More solar area → More structure

This positive feedback loop is discussed in Chapter 3 (Energy & Mass balances).

The wing structure is designed by balancing, bending stiffness and mass, torsional stiffness and solar integration, rib spacing and skin stability, airfoil thickness, not but not least structural strength.

High density of structural components is expected because solar aircraft wings behave structurally like ultra-light sailplane wings, which require many ribs and careful internal reinforcement due to low thickness, high aspect ratio and very low allowable mass.

## References

[1] Noth, A., and Siegwart, R., "Design of Solar Powered Airplanes for Continuous Flight," 2008.