REV	DESCRIPTION	DRAWN	DATE

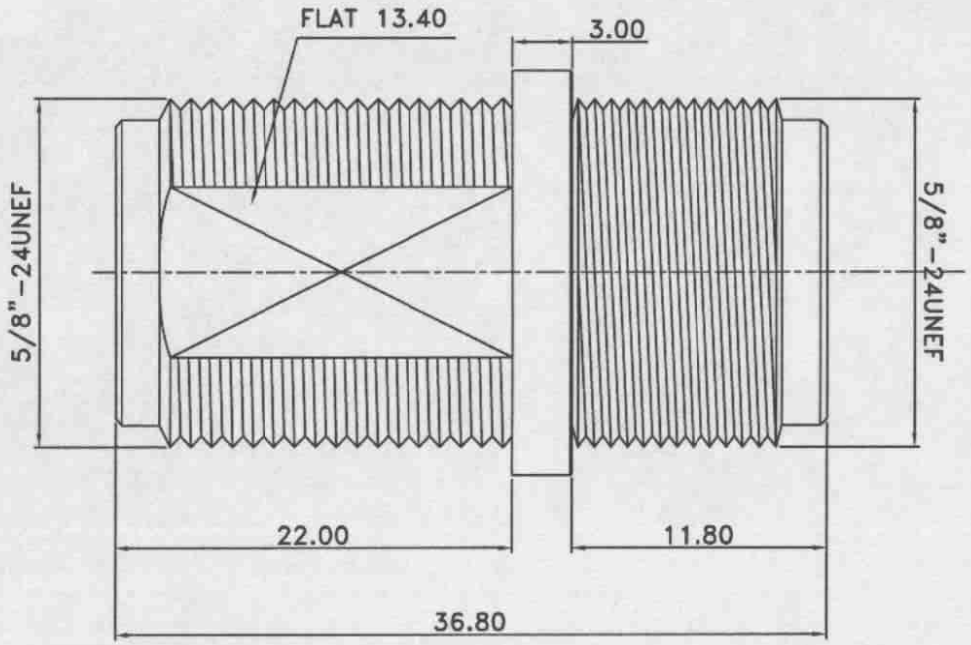

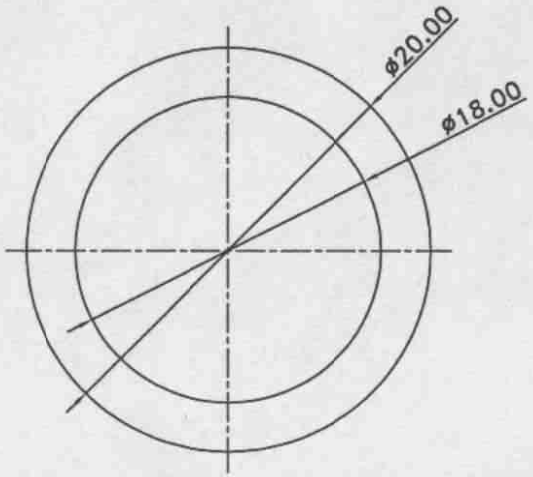

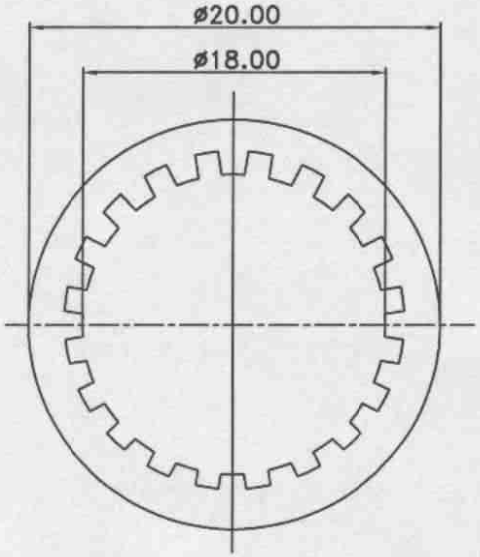

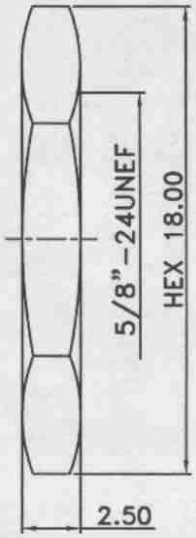

NO	Description	Q'ty	Material	Finish
4	O-RING	1	sl-rubbor	BLACK
3	DIELECTRIC	2	TEFLON	NONE
2	PIN	1	BRASS	GOLD
1	BODY	1	BRASS	NICKEL

UNLESS OTHERWISE SPECIFIED
1. REMOVE ALL BURRS.
2. BREAK ALL CONNERS & EDGES CO.15 MAX.
3. CHAMFER 1ST & LAST THREADS 45°.
4. DIAMETERS ON COMMON CENTERS. TO BE CONCENTRIC WITHIN 0.1 T.I.R.
5. ALL DIMENSIONS ARE AFTER PLATING.

* MAJOR DIMENSION

UNLESS OTHERWISE NOTED TOLERANCES
0.5–6=±0.2
6–30=±0.4
30–120=±0.6
120–315=±1.0
ANGLES=±1°

SCALE 3/1 UNIT MM

APPROVED

CHECKED

DRAWN CHAI

DRAWN DATE 06/07/20

TITLE N DOUBLE FEMALE BULKHEAD

DRAWING NO. N-1130-4-TGN

REV A GL

FILE NO. D:\DWG\N DOUBLE FEMALE BULKHEAD\N-1130-4-TGN