PH3244 — PHYSICS LABORATORY - IV

Yojit Kumar

Reg. no.: 20231289

Batch: (Friday)

Lab Partner: Nachiketa Kulkarni

Index of Experiments

#	Name of Experiment	Page	Date	
			Conducted	Submitted

Experiment No. 1

Quincke's Method

Date: 23 January, 2026

1.1 Aim

The aim of the experiment is to measure the magnetic susceptibility of the salt solution based on the principle that in a non-uniform magnetic field, magnetic dipoles within the liquid align with the field. This creates a force that pulls the liquid into the region of the stronger field (between the magnet poles), causing the liquid level to rise against gravity.

1.2 Theory

When an object is placed in a magnetic field, a magnetic moment is induced in it. The magnetic moment can then be measured by measuring the force exerted by the sample in an inhomogeneous magnetic field. The force on the sample is negative of the gradient of the change in energy density when the sample is placed. And a simplified expression can be written as:

$$\chi = \frac{2\rho g h}{\mu_0 H^2}$$

1.3 Experimental Observation

1.3.1 Preparation of the Solution

Solution - I

Weight of salt($MnSO_4.H_2O$) = 5.0 g
Volume of water added = 30 mL
Molarity of the salt =

$$\left(\frac{5.0}{169.02}\frac{1000}{30}\right) = 0.99\,\mathrm{M}$$

Solution - II

Weight of salt($MnSO_4.H_2O$) = 7.5 g
Volume of water added = 15 mL
Molarity of the salt =

$$\left(\frac{7.5}{169.02}\frac{1000}{15}\right) = 2.96\,\mathrm{M}$$

1.3.2 Calibration Data

Table 1.1: Calibration Data (Increasing Current)

#	Current I (A)	Magnetic Field B (10G)	B^2 (G^2)
1	0.00	40	160000
2	0.10	68	462400
3	0.40	159	2528100
4	0.70	266	7075600
5	1.00	374	13987600
6	1.30	478	22848400
7	1.60	575	33062500
8	1.90	670	44890000
9	2.20	762	58064400
10	2.50	848	71910400
11	2.80	931	86676100

Table 1.2: Calibration Data (Decreasing Current)

#	Current I (A)	Magnetic Field B (10G)	B^2 (G^2)
1	2.80	931	86676100
2	2.50	866	74995600
3	2.20	790	62410000
4	1.90	707	49984900
5	1.60	619	38316100
6	1.30	525	27562500
7	1.00	423	17892900
8	0.70	315	9922500
9	0.40	198	3920400
10	0.10	85	722500
11	0.00	46	211600

1.3.3 Microscope Measurment

Table 1.3: Microscope Readings for SolOne Inc

#	Current (A)	Field (G)	Readings (in mm)	Height Difference (in mm)
1	0.00	300.68	17.63	0.28
2	1.90	6657.42	17.35	0.00
3	2.20	7580.85	19.34	1.99
4	2.35	8034.36	19.45	2.10
5	2.50	8482.39	19.54	2.19
6	2.65	8924.95	19.63	2.28
7	2.80	9362.04	19.72	2.37

Table 1.4: Microscope Readings for SolOne Dec

#	Current (A)	Field (G)	Readings (in mm)	Height Difference (in mm)
1	2.80	9337.36	19.72	2.43
2	2.65	8997.67	19.66	2.37
3	2.50	8642.40	19.60	2.31
4	2.35	8271.54	19.53	2.24
5	2.20	7885.11	19.43	2.14
6	2.00	7345.64	19.30	2.01
7	1.90	7065.52	19.24	1.95
8	1.75	6632.35	19.15	1.86
9	1.60	6183.61	19.03	1.74
10	1.45	5719.28	18.87	1.58
11	1.30	5239.38	18.68	1.39
12	1.15	4743.90	18.64	1.35
13	1.00	4232.84	18.40	1.11
14	0.85	3706.20	18.05	0.76
15	0.70	3163.98	17.83	0.54
16	0.54	2568.45	17.59	0.30
17	0.40	2032.81	17.43	0.14
18	0.25	1443.86	17.37	0.08
19	0.00	427.65	17.29	0.00

Table 1.5: Microscope Readings for SolTwo Inc

#	Current (A)	Field (G)	Readings (in mm)	Height Difference (in mm)
1	0.00	300.68	16.82	0.00
2	0.15	834.45	16.93	0.11
3	0.30	1362.75	17.08	0.26
4	0.45	1885.58	17.29	0.47
5	0.60	2402.93	17.65	0.83
6	0.75	2914.81	18.09	1.27
7	0.90	3421.22	18.60	1.78
8	1.05	3922.16	19.17	2.35
9	1.20	4417.62	19.82	3.00
10	1.35	4907.61	20.40	3.58
11	1.50	5392.13	20.71	3.89
12	1.65	5871.17	21.16	4.34
13	1.80	6344.75	21.75	4.93
14	2.00	6967.66	22.07	5.25
15	2.20	7580.85	22.32	5.50
16	2.40	8184.31	23.55	6.73
17	2.60	8778.04	24.65	7.83

Table 1.6: Microscope Readings for SolTwo Dec

#	Current (A)	Field (G)	Readings (in mm)	Height Difference (in mm)
1	2.50	8642.40	25.19	8.06
2	2.30	8144.47	25.05	7.92
3	2.10	7618.84	24.70	7.57
4	1.90	7065.52	23.84	6.71
5	1.70	6484.50	22.82	5.69
6	1.50	5875.79	21.81	4.68
7	1.30	5239.38	19.95	2.82
8	1.00	4232.84	19.48	2.35
9	0.70	3163.98	18.58	1.45
10	0.40	2032.81	17.63	0.50
11	0.20	1244.08	17.28	0.15
12	0.00	427.65	17.13	0.00

1.3.4 Other Observations

1. The solution rises on applying an external magnetic field. → **its paramagnetic**.
2. You need a strong concentration for even $MnSO_4$, as we shown that there was very less height difference for our **solution 1**
3. We find it easier to measure readings going down compared to going up, as we believe that was solution passing through already wetted glass. Whilst for the first solution we were unable to measure a consistent trend, as we believe that was

because of the solution sticking to the tube. This has introduced a random error in our experiment.

4. We observed the meniscus changing its shape towards the end of the our second solution readings, when the meniscus was reaching the borders of the pole of the electromagnet. Suggesting, non-uniform fields at the boundaries.

5. We calibrated our setup for both increasing and decreasing current to check for hysterisis. We observed it to be very insignificant from our readings, although very clear to see.

1.4 Analysis

The first part in our analysis is to create the calibration plot for the Magnetic Field v/s Current curve using our measurments. We have calibrated the setup for both increasing and decreasing trend of current, wo we can utilise both sets of our measurments and also study the hysterisis in the coil.

Residual magnetic field strength before we started any measurments was 400 G and the same after we concluded our calibration was 460 G. So we saw a definite difference between field strength if we are increasing or decreasing, so we can confirm hysterisis. But the difference is pretty negligible.

We created simple python plots and curve fitted the calibration data onto a quadratic polynomial. The corresponding equation that we get for increasing and decreasing trend are

$$B = (-1.2162 \times 10^2) \times I^2 + (3.5767 \times 10^3) \times I + (3.0068 \times 10^2)$$
$$B = (-3.4619 \times 10^2) \times I^2 + (4.1514 \times 10^3) \times I + (4.2765 \times 10^2)$$

respectively.

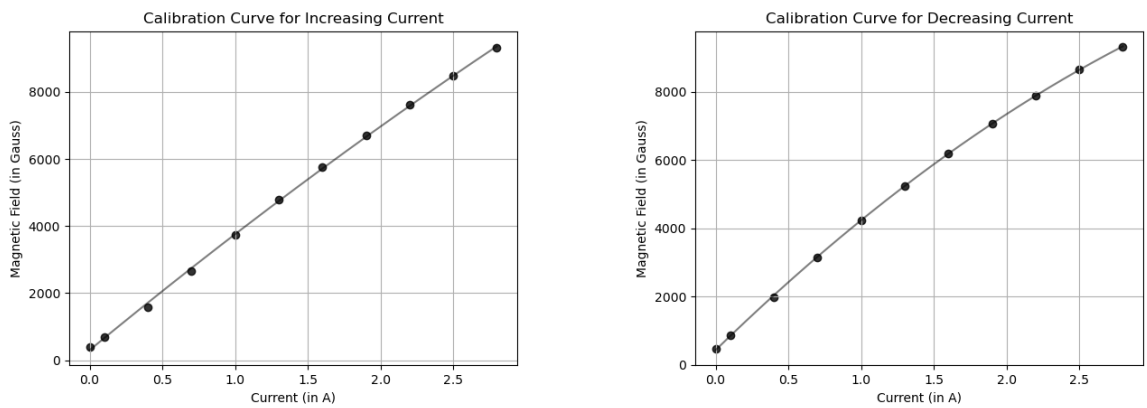

Figure 1.1: Calibration Curves for increasing & decreasing trend

Next, we move on to plot the Height Difference v/s B^2 curve, which we will do by finding the corresponding values for magnetic field from the calibration curve fit. **Note:** This has been linearly plotted after converting all the units in SI.

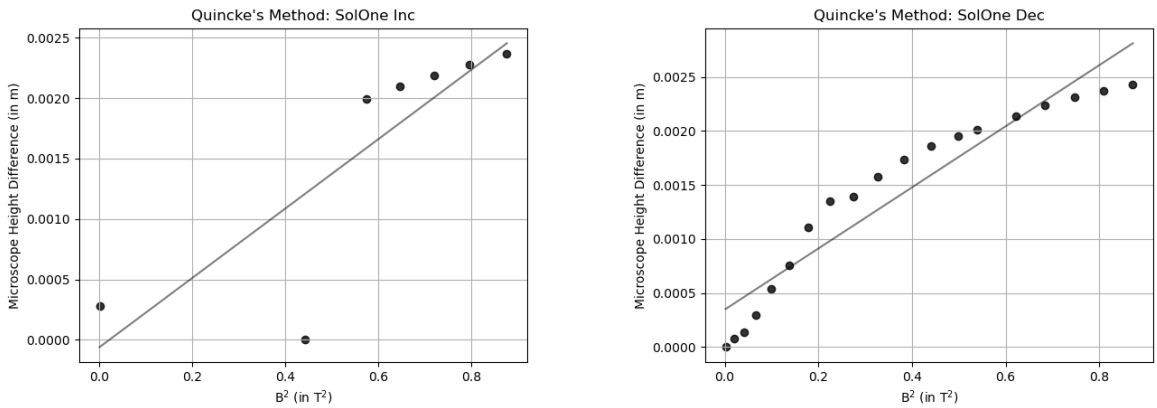

Figure 1.2: curve fit for first solution with less concentration

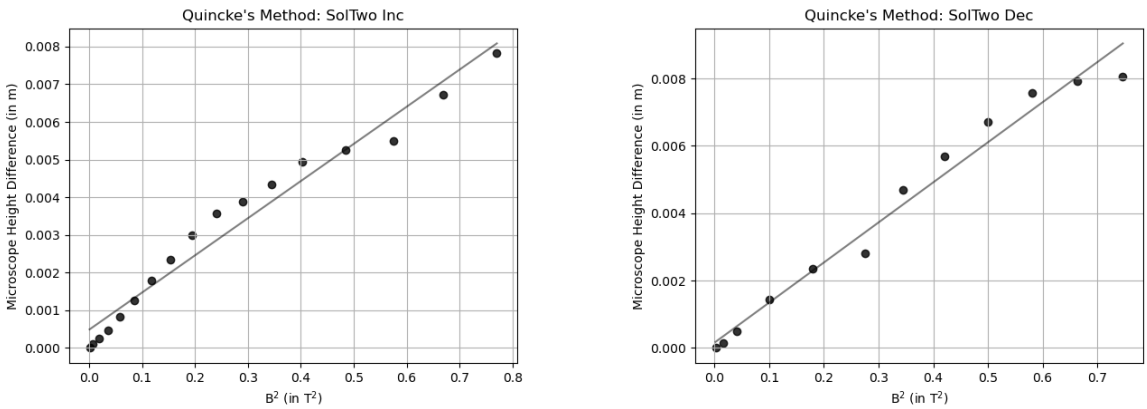

Figure 1.3: curve fit for second solution with higher concentration

Before moving on two calculate χ value, we need to find the specific density of the solution. We didn't had access to the specific gravity bottle as said in the lab manual, So wi will be taking some assumptions and calculating the values in a ideal sense.

- density of water (ρ_w) $= 0.9970\,\mathrm{g\,cm^{-3}}$ (at $25\,^\circ\mathrm{C}$)
- density of $MnSO_4.H_2O$ (ρ_{salt}) $= 2.95\,\mathrm{g\,cm^{-3}}$

Solution - I

- weight of water $= 30 \times 0.9970 = 29.91\,\mathrm{g}$
- volume of salt $= 5.0 \times \frac{1}{2.95} = 1.69\,\mathrm{mL}$
- Total weight of solution $= 5.0 + 29.91 = 34.91\,\mathrm{g}$
- Total volume of solution $= 30 + 1.69 = 31.69\,\mathrm{mL}$
- density of solution (ρ_{sol}) $= \frac{34.91}{31.69} = \underline{1.10\,\mathrm{g\,cm^{-3}}}$

Solution - II

- weight of water $= 15 \times 0.9970 = 14.96\,\mathrm{g}$
- volume of salt $= 7.5 \times \frac{1}{2.95} = 2.54\,\mathrm{mL}$
- Total weight of solution $= 7.5 + 14.96 = 22.46\,\mathrm{g}$
- Total volume of solution $= 15 + 2.54 = 17.54\,\mathrm{mL}$
- density of solution $(\rho_{sol}) = \frac{22.46}{17.54} = \underline{1.28\,\mathrm{g\,cm^{-3}}}$

Using the density and the slope and putting it in the standard formulae, we can find the value of χ_{sol} for us.

$$\chi_{SI} = \frac{2\mu_0 \rho g h}{B^2}$$

For Solution I (increasing),

$$\chi_1 = 2 \times 4\pi \times 10^{-7} \times 1100 \times 2.8711 \times 10^{-3}$$
$$\chi_1 = 9.0514 \times 10^{-5}$$

For Solution I (decreasing),

$$\chi_1 = 2 \times 4\pi \times 10^{-7} \times 1100 \times 2.8277 \times 10^{-3}$$
$$\chi_1 = 8.9147 \times 10^{-5}$$

For Solution II (increasing),

$$\chi_2 = 2 \times 4\pi \times 10^{-7} \times 1280 \times 9.8632 \times 10^{-3}$$
$$\chi_2 = 3.1095 \times 10^{-4}$$

For Solution II (decreasing),

$$\chi_2 = 2 \times 4\pi \times 10^{-7} \times 1280 \times 1.1890 \times 10^{-2}$$
$$\chi_2 = 3.7486 \times 10^{-4}$$

We will use a simple average to continue on from here;

$$\chi_1 = 8.9830 \times 10^{-5}$$
$$\chi_2 = 3.4390 \times 10^{-4}$$

This quantity χ can be referred to as Volume Magnetic susceptibility, to calculate mass susceptibility and molar susceptibility. We need to use the following formulae:

$$\chi'_{mass} = \chi/\rho$$
$$\chi''_{molar} = M\chi'$$

Water is a diamagnetic and we can remove its contribution from the volume susceptibility to calculate the mass susceptibility for just the salt.

$$\chi_{sol} = \chi_{salt} + \chi_{water}$$

For Solution - II,

$$3.7486 \times 10^{-4} = \chi_{salt} - (9.04 \times 10^{-6})$$
$$\chi_{salt} = 3.8390 \times 10^{-4}$$

Similar relation can be written about the mass susceptibility of the solution:

$$\chi'_{sol} = \frac{m_{salt}}{m_{sol}}\chi'_{salt} + \frac{m_{water}}{m_{sol}}\chi'_{water}$$

$$\chi'_{sol} = \frac{7.5}{22.46}\chi'_{salt} + \frac{14.96}{22.46}(-9.04 \times 10^{-9})$$
$$\frac{3.7486 \times 10^{-4}}{1280} = 0.3339\chi'_{salt} - (6.02 \times 10^{-9})$$
$$\chi'_{salt} = 8.9511 \times 10^{-7}$$

Now, if we were to calculate the Molar susceptibility we get:

$$\chi_{molar} = 169.02 \times 10^{-3} \times 8.9511 \times 10^{-7}$$
$$\chi_{molar} = 1.5127 \times 10^{-7}$$

Table 1.7: Experimental Results for the given salt

#	Parameter	Value
1	Volume Susceptibility (χ)	3.7486×10^{-4}
2	Mass Susceptibility (χ')	$8.9511 \times 10^{-7}\,\mathrm{m^3\,kg^{-1}}$
3	Molar Susceptibility (χ'')	$1.5127 \times 10^{-7}\,\mathrm{m^3\,mol^{-1}}$

Theoritical Molar Susceptibility for Manganese(II) Sulfate Monohydrate ($\boldsymbol{MnSO_4.H_2O}$) $= 1.7844 \times 10^{-7}\,\mathrm{m^3\,mol^{-1}}$

Error Analysis

$$\text{Error in Molar Susceptibility result} = \frac{1.7844 \times 10^{-7} - 1.5127 \times 10^{-7}}{1.7844 \times 10^{-7}} \times 100\%$$
$$= 15.22\%$$

The propagation of uncertainty while taking measurement can be written as:

$$
\begin{aligned}
\frac{\sigma_{\chi''}}{\chi''} &= \frac{\sigma_{\chi'}}{\chi'} \\
&= \sqrt{\left(\frac{0.1}{7.5}\right)^2 + \left(\frac{0.1}{22.46}\right)^2 + \left(\frac{\sigma_{\chi'_{sol}}}{\chi'_{sol}}\right)^2} \\
&= \sqrt{\left(\frac{0.1}{7.5}\right)^2 + \left(\frac{0.1}{22.46}\right)^2 + \left(\frac{\sigma_{\chi}}{\chi}\right)^2} \\
&= \sqrt{\left(\frac{0.1}{7.5}\right)^2 + \left(\frac{0.1}{22.46}\right)^2 + \left(\frac{\sigma_{slope}}{\text{slope}}\right)^2} \\
\sigma_{\chi''} &= 1.5127 \times 10^{-7} \sqrt{\left(\frac{0.1}{7.5}\right)^2 + \left(\frac{0.1}{22.46}\right)^2 + \left(\frac{5.8082 \times 10^{-4}}{1.1890 \times 10^{-2}}\right)^2} \\
\sigma_{\chi''} &= 7.68 \times 10^{-9}
\end{aligned}
$$

This uncertainty due to measurment comes around to be about 5%. Using this we can safely say that our experiment was able to measure the magnetic susceptibilty of the salt under certain standard deviation limits.

Why is our result slightly lower than theoritcal?
We attribute this deviation to be mostly arising from a improper setup. Before our second set of readings, we tried to make sure our tube was clean, and used IPA to help us aid in that process. We waited for long enough time for the IPA to dry off, but as we started taking readings for our second solution we see that some bubbles are rising in the tube, especially at the thinner end. This was obvious to see through the microscope, and minorly affected our ability to take the microscope reading. In hindsight, we realised that this must be the IPA rising as it is lighter compared to our solution. This introduced a IPA which slightly diluted our solution and affected the density value. Magnetically this doesn't had a significant as it is dimagnetic like water, but has even lesser magnetic moment. In an extreme case, oxidation of manganese ions in the solution could also have played a role in the decreased value. Also the theoritcal value is temperature dependent and measured at 293 K which is definitly lower than the temperature setting for our experiment. And a higher temperature would lead to a lower value as the magnetization is related to temperature as inverse dependency as stated by Curie's Law.

1.5 Conclusion

We successfully completed the experiment by measuring the magnetic susceptibility of the salt, manganese sufate monohydrate. Our measured value for the molar magnetic susceptibility (1.5217×10^{-7}) was about **15%** deviation form the theoritical value.

Our value being lower than the theoritical one can be easily explained because of the uncertainty in the solution density and temperature conditions.

Experiment No. 2

Bipolar Junction Transistor

Date: 30 January, 2026

2.1 Aim

The aim of the experiment is to study the input and output characterstic of an n-p-n Bipolar Junction Transistor that is setup in common emitter bias mode. We will also construct an amplifier circuit and test the current and voltage gains for the circuit. We will also create a phase-shift oscillator circuit and test its function.

2.2 Theory

A BJT uses two p-n junctions, which are regions on a single crystal of material. They are either pnp or npn type. This create three regions: the emitter, the base and the collector. The emitter is heavily doped and emits charge carriers, the base is lightly doped and thin, and the collector is moderately doped and collects the charge carriers.

Diagram of a BJT in CE configuration:

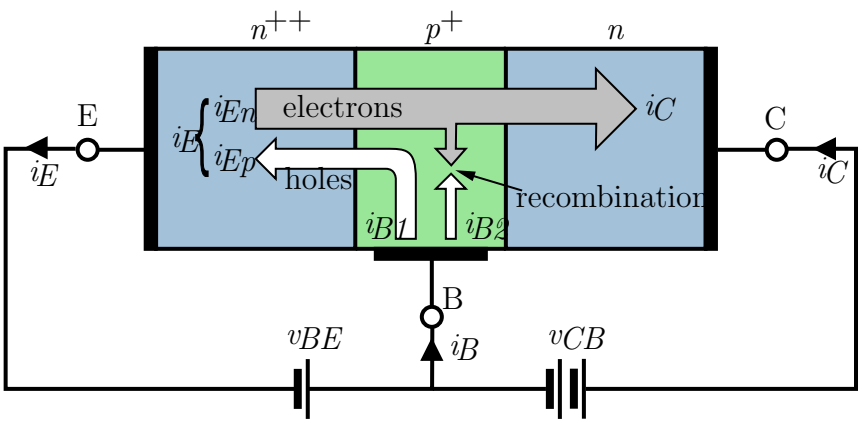

Figure 2.1: NPN BJT with forward-biased B-E junction and reverse-biased B-C junction

The BJT can be used as an amplifier or a switch. In the common emitter (CE) configuration, the emitter is common to both the input and output circuits, and the base is the input while the collector is the output. The BJT can be used to amplify signals by controlling the current through the base, which in turn controls the current through the collector and emitter. The current gain of a BJT is defined as the ratio of the collector current to the base current, and is denoted by β. The BJT can also be used to create oscillators by using feedback to sustain oscillations.
Circuit Diagram of a BJT amplifier and oscillator:

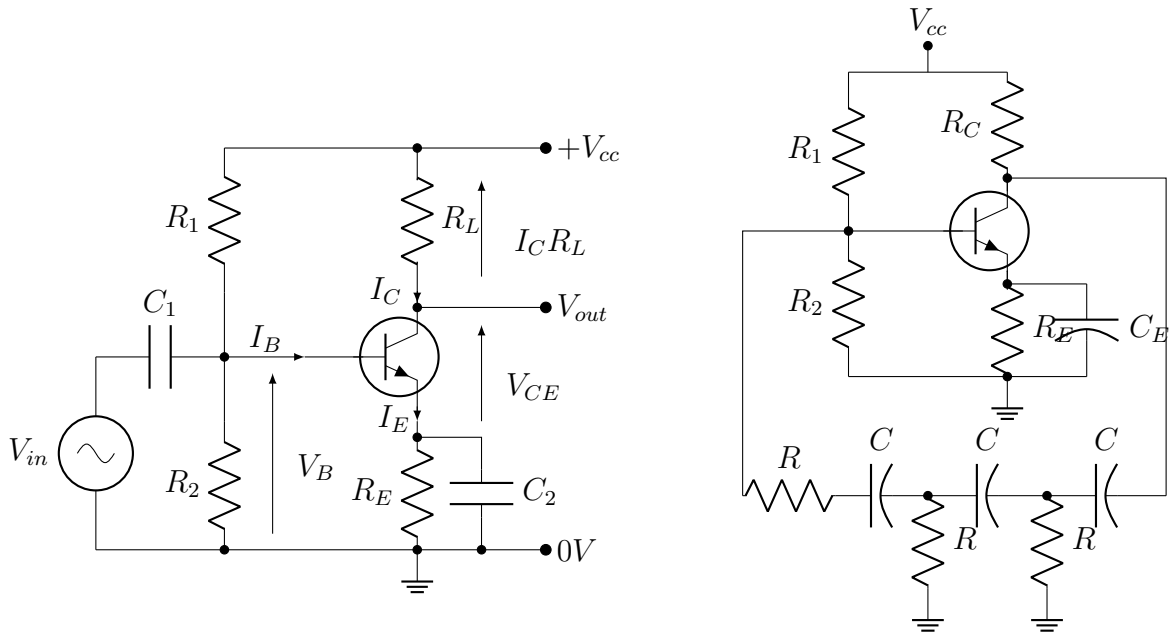

(a) BJT amplifier (b) BJT oscillator

Figure 2.2: BJT amplifier and oscillator circuits

In the amplifier circuit (figure 2.2a), a capacitor is used before V_{out} to block any DC component of the output signal, allowing only the AC component to pass through.

- The current gain $\beta_{dc} = \dfrac{\Delta I_C}{\Delta I_B}$
- The voltage gain $\dfrac{V_{\text{out}}}{V_{\text{in}}} = \dfrac{\Delta V_L}{\Delta V_B} = -\dfrac{R_L}{R_E}$

In the oscillator circuit (figure 2.2b), there is an oscillation in voltage between the Collector and Ground. The frequency of oscillation is given by:

$$f = \frac{1}{2\pi RC} \frac{1}{\sqrt{6 + 4\frac{R_C}{R}}}$$

We attempted to build the oscillator such that $f \approx 1000Hz$

2.3 Experimental Observation

Table 2.1: Base Characterstic

	V_CC = 1.00 V		V_CC = 3.00 V		V_CC = 8.00 V	
#	V_{BE} (mV)	I_B (mA)	V_{BE} (mV)	I_B (mA)	V_{BE} (mV)	I_B (mA)
1	3.60	0.00	3.60	0.00	269	0.00
2	575.00	4.23	241.00	0.00	435	0.03
3	589.00	6.57	458.00	0.08	547	1.19
4	455.00	0.07	560.00	2.54	570	2.57
5	533.00	1.02	586.00	6.04	588	4.50
6	558.00	2.33	604.00	10.25	604	7.01
7	598.00	8.61	615.00	14.50	614	9.96
8	604.00	10.16	625.00	19.45	623	13.49
9	614.00	13.95	632.00	23.65	633	19.34
10	621.00	17.05	644.00	33.55	637	22.40

Table 2.2: Collector Characterstic

	I_B = 20 µA		I_B = 50 µA		I_B = 80 µA	
#	V_{CE} (V) 0	I_C (mA) 0	V_{CE} (V) 1	I_C (mA) 1	V_{CE} (V) 2	I_C (mA) 2
1	0.00	0.00	0.01	0.00	0.00	0.00
2	0.01	0.02	0.06	1.24	0.06	2.05
3	0.07	0.46	0.13	7.19	0.11	7.13
4	0.12	1.64	0.21	10.25	0.18	13.84
5	0.24	2.88	0.41	11.04	0.33	17.01
6	0.34	2.97	0.61	12.29	0.53	18.73
7	0.54	2.97	0.84	12.38	0.82	20.32
8	0.80	2.97	1.13	12.44	1.19	20.95
9	1.21	2.98	2.23	12.67	1.96	21.80
10	1.92	2.99	3.26	12.94	3.21	23.09
11	2.83	3.01	4.80	13.54	5.66	25.96
12	4.91	3.07	7.32	14.05	9.68	29.76
13	9.11	3.16	NaN	NaN	NaN	NaN

Amplifier Circuit

The input signal was a sinusoidal wave of frequency 2046Hz.

V_{in}(V)	V_{out}(V)	I_{C}(mA)	I_{B}(mA)	$R_{\text{L}}(\Omega)$	$R_{\text{E}}(\Omega)$
0.68	7.04	176	1.38	1.2k	220
0.76	3.80	209	1.56	1.2k	220
1.00	4.36	292	2.23	1.2k	220

Table 2.3: Observations for the BJT amplifier circuit

Oscillator Circuit

The expected frequency of oscillation was 1000Hz. Our input voltage was 12V DC. The observed output was 6V DC. Even after multiple trials, with different resistor and capacitor combinations, we got a DC signal the entire time.

We attempted with values of R ranging from 100Ω to $20k\Omega$ and C ranging from $10\mu F$ to $220\mu F$. These trials were done with both ceramic and electrolytic capacitors, but our observations did not change.

Reason for calling the output a DC signal: The oscilloscope, when set to AC mode, didn't show any consistent oscillations or a time period of the oscillations. Meanwhile, when set to DC mode, it showed a constant voltage of some value, with almost no fluctuations.

2.4 Analysis & Conclusion

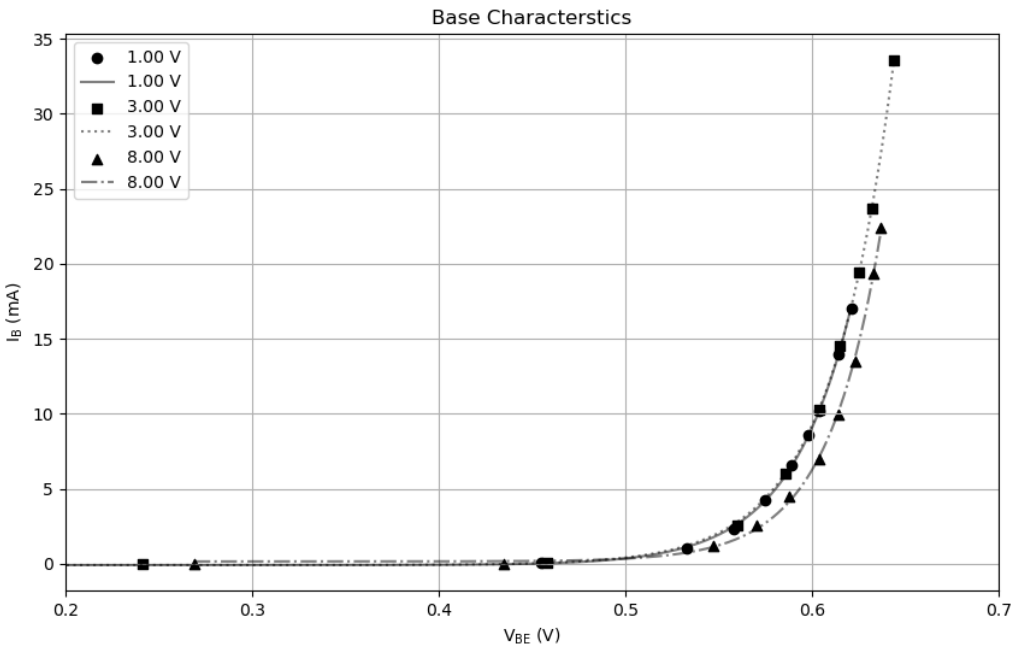

Figure 2.3: Input Characterstics Curve

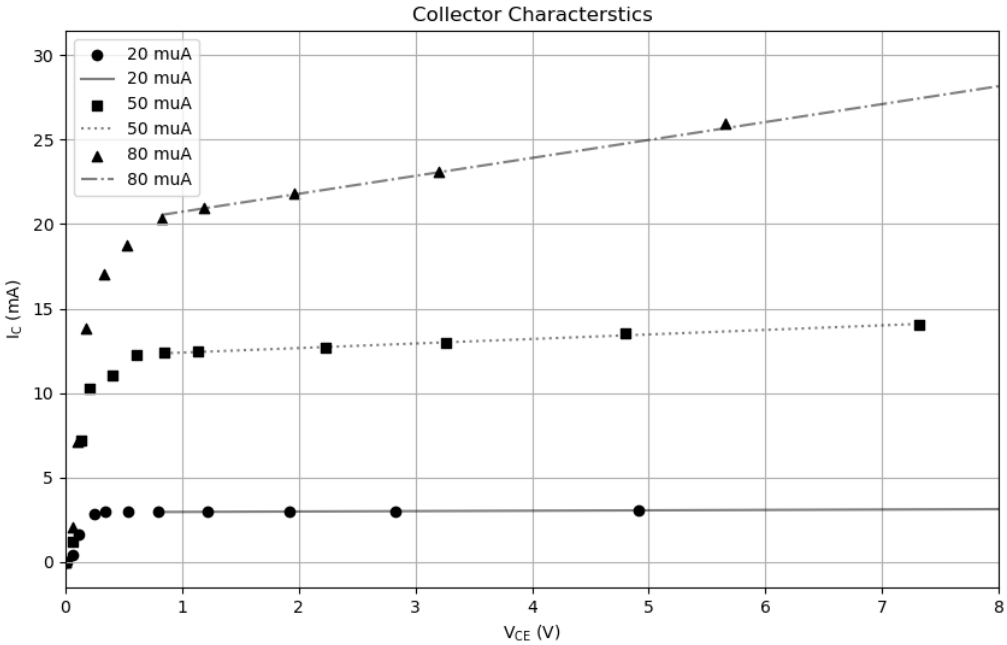

Figure 2.4: Output Characterstics Curve

Transfer Characteristics

The curves for the input2.3 and output2.4 characteristics of the BJT show that the BJT is working, and performs within specifications.

Amplifier Circuit

The current gain of the amplifier circuit is $\beta_{\text{dc}} = 130.82$, which shows that a small change in the input current will cause a large change in the output current. The voltage gain of the amplifier circuit is $A_v = -24.44$. According to the formula given, the voltage gain should be $-\dfrac{R_L}{R_E} = -\dfrac{1200}{220} = -5.45$. The observed voltage gain is 6.57, which is close to the expected value.

Oscillator Circuit

We tried different troubleshooting involving changing the gain of the amplifier, simulating the electrical circuit before creating it physically, but we were unable to create a working oscillator circuit even after that,

Experiment No. 3

e/m Ratio

Date: 13 February, 2026

3.1 Aim

The aim of the experiment is to calculate the charge-by-mass (e/m) ratio of an electron, which is a fundamental constant that governs the behaviour of electrons in electromagnetic fields. Our experiment is based on Thomson's method and we use a Helmoltz coil apparatus in this setup.

3.2 Theory

This experiment works by accelerating electrons through a known potential in the tube. Some of these electrons collide with the Helium filled in the tube and radiate visible light, giving us a track of their path. The tube is placed between a pair of Helmholtz coil which provides it a uniform magnetic field. The beam is deflected in a circular path of radius r . This circular path's diameter can be measured and can be used to obtain the e/m ratio.

$$e/m = 8V/B^2d^2$$

We can simply derive this relation by the following steps:
Kinetic energy of the accelerated electron can be described as $eV = mv^2/2$. So the velocity can be written as:

$$v = \sqrt{2eV/m} \tag{3.1}$$

Passing through a uniform magnetic field B, Lorentz force acting on the electron make it go on a circular path if the field is orthogonal to the electron's trajectory. We can write this relation as the centripetal force balancing the Lorentz force, $eVB = mv^2/r$. So the velocty can be written as:

$$v = eBr/m \tag{3.2}$$

From eqns. Equation 3.1 & Equation 3.2 we obtain:

$$eBr/m = \sqrt{2eV/m} \tag{3.3}$$

$$e/m = 2V/B^2r^2 \tag{3.4}$$

For this apparatus we are controlling and fixing the magnetic field by supplying constant current to the pair of Helmholtz coils. We can write this magentic field produced by the coils as:

$$B = 2 \times \frac{\mu_0 I n}{2(5/4)^{3/2} a} = 2 \times \left(\frac{2\pi I n}{(5/4)^{3/2} a} \times 10^{-7} \right) \text{tesla}$$

where, n is the number of turns in a coil, and a is the radius of the coil.
The specifications of our specific apparatus is as follows:

Radii of Coils	14 cm
Number of turns	160 each
Accelerating Voltage	0 - 250V

Table 3.1: Specifications of the e/m Apparatus

Using all of this information, our final formulae for e/m ratio calculation is simply:

$$\frac{e}{m} = (7.576 \times 10^{-6}) \times \frac{V}{I^2 d^2} \mathrm{C\,kg^{-1}} \tag{3.5}$$

3.3 Experimental Observation

Table 3.2: First set of reading at 1 ampere

Voltage (V)	Current (A)	Left Reading (cm)	Right Reading (cm)
200	1	4.80	15.30
180	1	5.30	15.00
160	1	5.20	14.70
140	1	5.50	14.50
120	1	5.80	14.10
100	1	6.30	13.80

Table 3.3: Second set of reading at 1.5 ampere

Voltage (V)	Current (A)	Left Reading (cm)	Right Reading (cm)
100	1.50	7.60	12.50
120	1.50	7.30	12.80
140	1.50	7.10	13.00
160	1.50	6.80	13.30
180	1.50	6.90	13.50
200	1.50	6.50	13.10

3.4 Analysis

Calculating from plotting

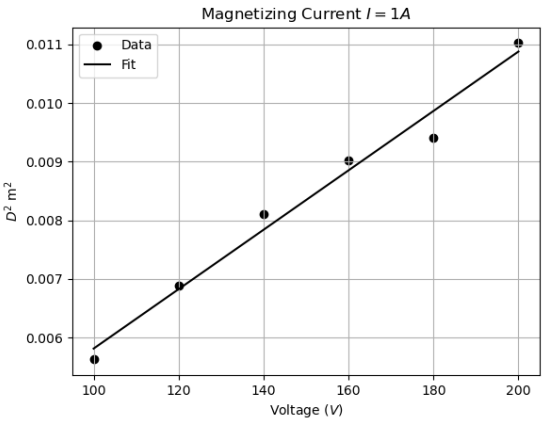

(a) D^2 vs. Voltage for $I = 1\,\mathrm{A}$

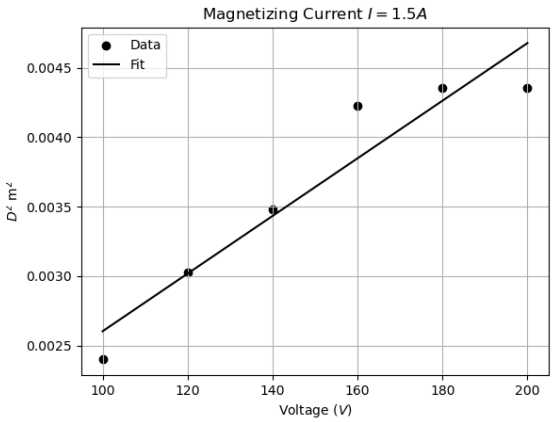

(b) D^2 vs. Voltage for $I = 1.5\,\mathrm{A}$

We have simply linearly fitted the data to find the following plots; Figure 3.1a & Figure 3.1b. For the plot Figure 3.1a the slope of the linear fit is $5.0693 \times 10^{-5} \pm 3.6199 \times 10^{-6}$ and for the plot Figure 3.1b the slope of the linear fit is $2.0731 \times 10^{-5} \pm 3.2602 \times 10^{-6}$. From the slope we can easily calculate the e/m ratio using the relation as given in Equation 3.5.
For Figure 3.1a:

$$\begin{aligned}\frac{e}{m} &= (7.576 \times 10^{-6}) \times \frac{1}{5.0693 \times 10^{-5} \times (1)^2}\mathrm{C\,kg^{-1}} \\ &= 1.4945 \times 10^{11} \pm 1.0672 \times 10^{10}\end{aligned}$$

For Figure 3.1b:

$$\begin{aligned}\frac{e}{m} &= (7.576 \times 10^{-6}) \times \frac{1}{2.0731 \times 10^{-5} \times (1.5)^2}\mathrm{C\,kg^{-1}} \\ &= 1.6242 \times 10^{11} \pm 2.5542 \times 10^{10}\end{aligned}$$

Directly Calculating from the data by taking a mean

Table 3.4: Directly calculated e/m ratio

#	Voltage (V)	Current (A)	Diameter (m2)	V/I2d2	e/m
1	200	1.00	0.10	18140.59	137433106575.96
2	180	1.00	0.10	19130.62	144933574237.43
3	160	1.00	0.10	17728.53	134311357340.72
4	140	1.00	0.09	17283.95	130943209876.54
5	120	1.00	0.08	17419.07	131966903759.62
6	100	1.00	0.08	17777.78	134684444444.44
7	100	1.50	0.05	18510.81	140237863853.02
8	120	1.50	0.06	17630.85	133571349862.26
9	140	1.50	0.06	17874.81	135419579303.52
10	160	1.50	0.07	16831.03	127511900065.75
11	180	1.50	0.07	18365.47	139136822773.19
12	200	1.50	0.07	20406.08	154596469747.98

Thus, the mean value for e/m obtained is $1.3706 \times 10^{11}$and the standard deviation as 6.8718×10^{9}.

Error Analysis

We ae getting lower than theoritcal value consistently for all our observations. This is predominantly due to the fact that it is impossible for us to accurately measure the diameter of the path of the beam. We simply took the outermost ring of the thick beam that we observed, to be consistent among our readings, but this simply lead to a higher estimation of r the radius of trajectory. And finally lead to us calculating a lower e/m ratio.

The error in our final result compared to the theoritcal value is:

$$\begin{aligned}\text{Error} &= \frac{1.7588e11 - resultTwo}{1.7588e11} \times 100\% \\ &= 7.65\%\end{aligned}$$

3.5 Conclusion

The theoritical value for e/m ratio is $1.76\,\mathrm{C\,kg^{-1}}$. Our best result was during the second set of calculations albeit with a higher standard deviation which was equal to $1.6242 \times 10^{11} \pm 2.5542 \times 10^{10}\mathrm{C\,kg^{-1}}$. This gave us an error percentage equal to 7.65%.

Our values were consistently below the theoritical value which has been explained above sufficiently. Overall we achieved a reasonably close value for e/m ratio and can consider the experiment as successful.