MAX30003

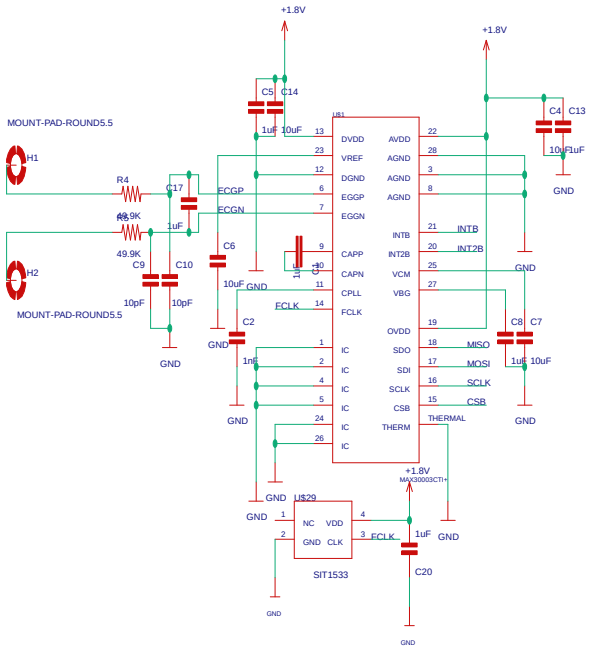

LOGIC LEVEL CONVERTER

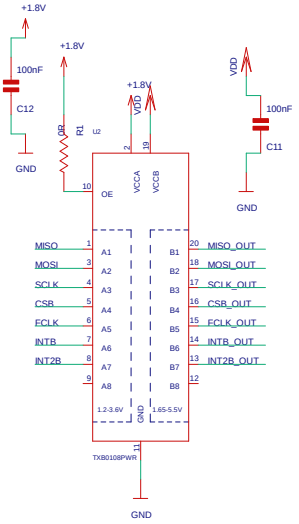

1.8V POWER

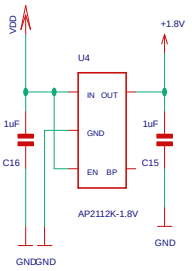

ESP32 PICOD4

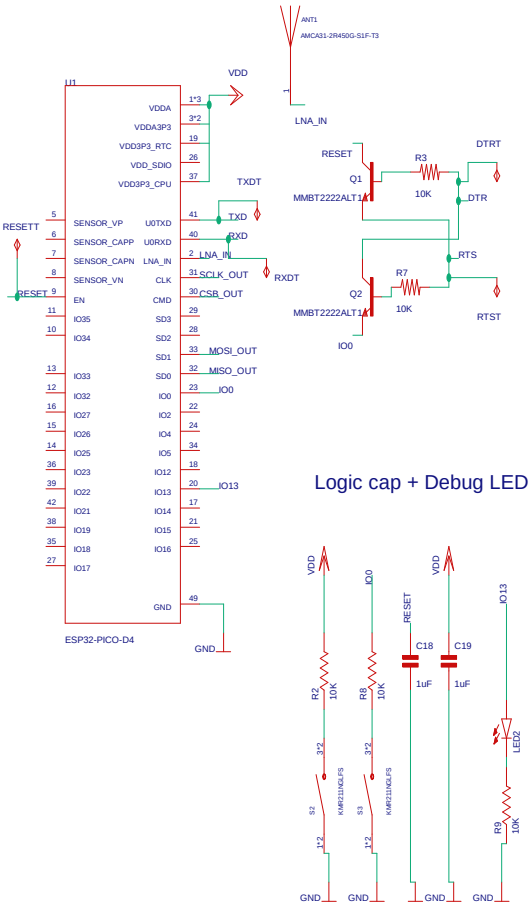

UART & USB

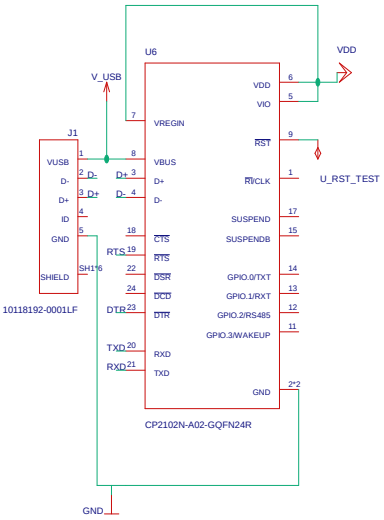

POWER

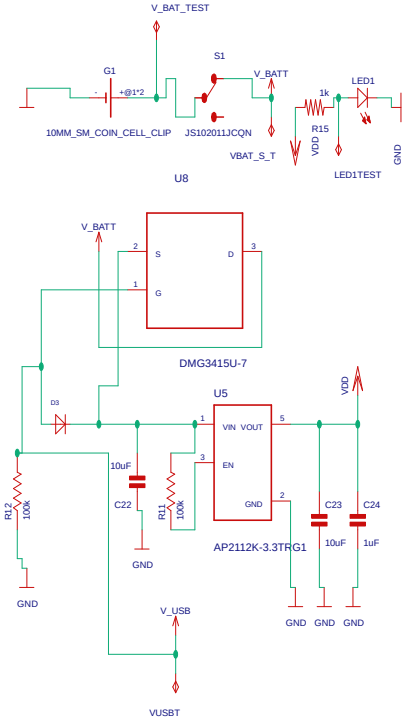

ECG

1/29/2021 5:14 PM

Sheet: 1/1