Patterns in Linear Algebra

Yiwen Su, Yongqian Jiang, Qingyi Wang
Supervisor: Xueping Zhao

University of Nottingham Ningbo China

25 April 2025

Overview

1. Introduction
2. The First Family Matrices
   - Physical Background: Spring-particle system
     - Construct Tridiagonal matrix: $T = A^T CA$
   - Matrix decomposition
     - $T = LDL^T$
     - Orthogonality and $A = QR$
     - Singular value decomposition of $A = C \sum S^T$
3. The Second Family Matrices
   - Physical Background: Complete graph and network problems
   - Kirchhoff Matrix and Kirchhoff's Law
4. Reference List

1 Introduction

2 The First Family Matrices

3 The Second Family Matrices

4 Reference List

Motivation

- Matrix has wide applications in mathematical field.
- How to construct matrices from simple frameworks and get their representative patterns.

Motivation

- Matrix has wide applications in mathematical field.
- How to construct matrices from simple frameworks and get their representative patterns.

Our work

1. Introduce two matrix families and investigate the potential applications of matrices to other physical systems.
2. Better interpretation of matrix structures, properties and special patterns.

1 Introduction

2 The First Family Matrices
- Physical Background: Spring-particle system
  - Construct Tridiagonal matrix: $T = A^T CA$
- Matrix decomposition

3 The Second Family Matrices

4 Reference List

Physical Background: Tridiagonal matrix of spring-particle system

displacements x

$$e = Ax$$

elongations e

$$y = Ce$$

spring forces y

$$f = A^T y$$

external forces f

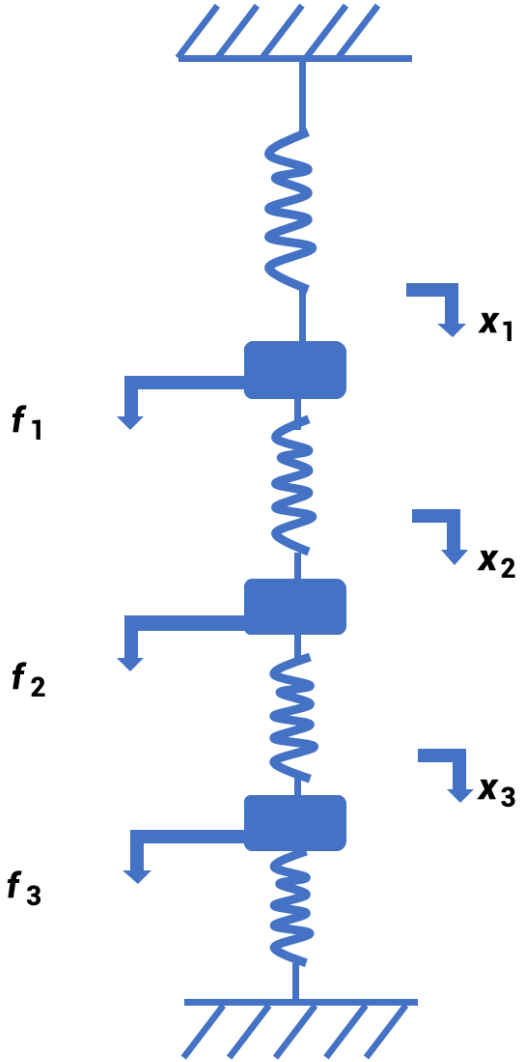

Construct Tridiagonal matrix: $T = A^T CA$

Step 1: Express the stretched length by x.

$$\begin{aligned} e_1 &= x_1 \\ e_2 &= x_2 - x_1 \\ e_3 &= x_3 - x_2 \\ e_4 &= -x_3 \end{aligned} \qquad \mathbf{e} = \begin{bmatrix} 1 & 0 & 0 \\ -1 & 1 & 0 \\ 0 & -1 & 1 \\ 0 & 0 & -1 \end{bmatrix} \begin{bmatrix} x_1 \\ x_2 \\ x_3 \\ x_4 \end{bmatrix} = A\mathbf{x}$$

Step 2: Apply Hooke's law $y = ce$, where c is elastic coefficient.

$$\begin{aligned} y_1 &= c_1 e_1 \\ y_2 &= c_2 e_2 \\ y_3 &= c_3 e_3 \\ y_4 &= c_4 e_4 \end{aligned} \qquad \mathbf{y} = \begin{bmatrix} c_1 & & & \\ & c_2 & & \\ & & c_3 & \\ & & & c_4 \end{bmatrix} \begin{bmatrix} e_1 \\ e_2 \\ e_3 \\ e_4 \end{bmatrix} = C\mathbf{e}$$

Construct Tridiagonal matrix: $T = A^T CA$

Step 3: Balance of forces — internal and external.

$$\begin{aligned} f_1 &= y_1 - y_2 \\ f_2 &= y_2 - y_3 \\ f_3 &= y_3 - y_4 \end{aligned} \qquad \mathbf{f} = \begin{bmatrix} 1 & -1 & 0 & 0 \\ 0 & 1 & -1 & 0 \\ 0 & 0 & 1 & -1 \end{bmatrix} \begin{bmatrix} y_1 \\ y_2 \\ y_3 \\ y_4 \end{bmatrix} = A^T \mathbf{y}$$

Tridiagonal Matrix $T = A^T CA$

Combining the previous three steps $\mathbf{f} = A^T \mathbf{y} = A^T C\mathbf{e} = A^T CA\mathbf{x}$, the tridiagonal matrix $T = A^T CA$ can be constructed.

$$T = A^T CA = \begin{bmatrix} c_1 + c_2 & -c_2 & 0 \\ -c_2 & c_2 + c_3 & -c_3 \\ 0 & -c_3 & c_3 + c_4 \end{bmatrix}$$

Construct Tridiagonal matrix: $T = A^T CA$

Key properties:

1. **Symmetric**: $(A^T CA)^T = A^T C^T A = A^T CA$.
2. **Tridiagonal**: Only the main diagonal and the immediate upper and lower diagonals are non-zero.
3. **Positive definiteness**: $\mathbf{x}^T T\mathbf{x} > 0$ for every column $\mathbf{x} \neq \mathbf{0}$.
   The columns of A are independent. if $\mathbf{x} \neq \mathbf{0}$, then $A\mathbf{e} \neq \mathbf{0}$, $\mathbf{e} \neq \mathbf{0}$.
   $\mathbf{x}^T T\mathbf{x} = \mathbf{x}^T A^T CA\mathbf{x} = (A\mathbf{x})^T C(A\mathbf{x}) = \mathbf{e}^T C\mathbf{e} = \sum_{i=1}^{4} c_i e_i^2 > 0$

Generalization:

Replace 3 masses with n masses and specialize $c_i = 1$.
$T_n = A^T CA = A^T IA = A^T A$

$$T_3 = \begin{bmatrix} 2 & -1 & 0 \\ -1 & 2 & -1 \\ 0 & -1 & 2 \end{bmatrix} \quad \Rightarrow \quad T_n = \begin{bmatrix} 2 & -1 & & \\ -1 & 2 & \ddots & \\ & \ddots & \ddots & -1 \\ & & -1 & 2 \end{bmatrix}$$

1 Introduction

2 The First Family Matrices
- Physical Background: Spring-particle system
- Matrix decomposition
  - $T = LDL^T$
  - Orthogonality and $A = QR$
  - Singular value decomposition of $A = C \sum S^T$

3 The Second Family Matrices

4 Reference List

Matrix Decomposition: $T = LDL^T$

Gaussion elimination on T:

$$T = \begin{bmatrix} 2 & -1 & 0 \\ -1 & 2 & -1 \\ 0 & -1 & 2 \end{bmatrix} \quad \rightarrow \quad \begin{bmatrix} 2 & -1 & 0 \\ 0 & \frac{3}{2} & -1 \\ 0 & 0 & \frac{4}{3} \end{bmatrix} = U$$

By fundamental **LU decomposition**, T can be represented as LDL^T.

Decomposition of LDL^T

If T is a positive definite symmetric matrix, there is a unique decomposition:

$$T = LDL^T = \begin{bmatrix} 1 & 0 & 0 \\ -\frac{1}{2} & 1 & 0 \\ 0 & -\frac{2}{3} & 1 \end{bmatrix} \begin{bmatrix} 2 & 0 & 0 \\ 0 & \frac{3}{2} & 0 \\ 0 & 0 & \frac{4}{3} \end{bmatrix} \begin{bmatrix} 1 & -\frac{1}{2} & 0 \\ 0 & 1 & -\frac{2}{3} \\ 0 & 0 & 1 \end{bmatrix}$$

Notice: $\det(T_3) = 2 \times \frac{3}{2} \times \frac{4}{3} = 4$, and $\det(T_n) = n + 1$.

Orthogonality and $A = QR$

Step1: Gram-Schmidt process on A:

$$A = \begin{array}{c} \begin{bmatrix} 1 & 0 & 0 \\ -1 & 1 & 0 \\ 0 & -1 & 1 \\ 0 & 0 & -1 \end{bmatrix} \\ \begin{array}{ccc} a_1 & a_2 & a_3 \end{array} \end{array}$$

Gram-Schmidt Process

Let V be an inner product space and $S = \{a_1, a_2, \ldots, a_n\}$ be a linearly independent subset of V. Define $S' = \{q_1, q_2, \ldots, q_n\}$, where $a_1 = q_1$ and

$$q_k = a_k - \sum_{j=1}^{k-1} \frac{\langle a_k, q_j \rangle}{\|q_j\|^2} q_j \quad \text{for } 2 \leq k \leq n.$$

Then S' is an orthogonal set of nonzero vectors s.t. $\text{span}(S') = \text{span}(S)$.

Orthogonality and $A = QR$

Geometric interpretation: Gram-Schmidt process is able to derive an orthogonal basis of the space from a basis on this space.

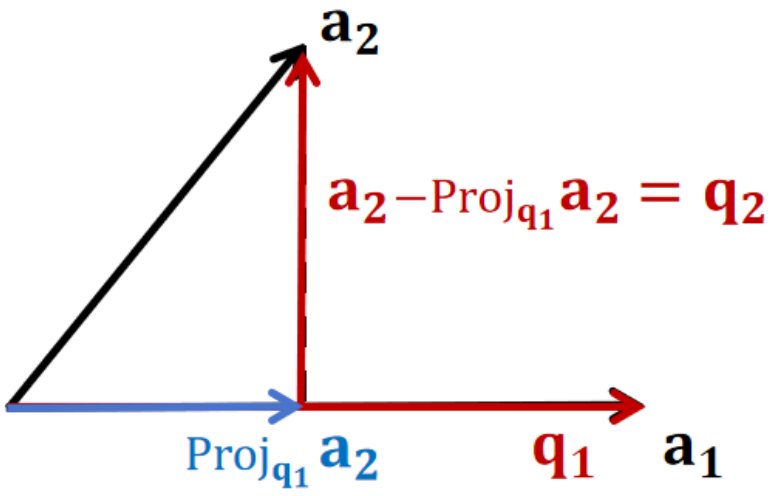

Figure: 2D

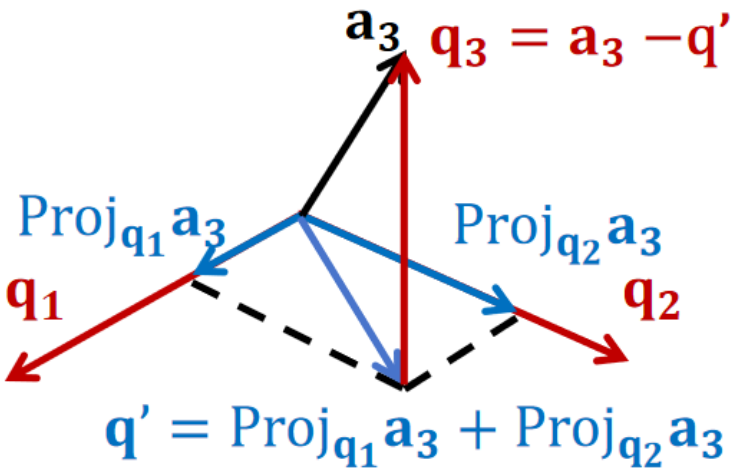

Figure: 3D

Orthogonality and $A = QR$

Step1: Gram-Schmidt process on A:

$$A = \begin{bmatrix} 1 & 0 & 0 \\ -1 & 1 & 0 \\ 0 & -1 & 1 \\ 0 & 0 & -1 \end{bmatrix} \quad \rightarrow \quad B = \begin{bmatrix} 1 & \frac{1}{2} & \frac{1}{3} \\ -1 & \frac{1}{2} & \frac{1}{3} \\ 0 & -1 & \frac{1}{3} \\ 0 & 0 & -1 \end{bmatrix}$$

$$\begin{array}{ccc} a_1 & a_2 & a_3 \end{array} \qquad\qquad \begin{array}{ccc} q_1 & q_2 & q_3 \end{array}$$

where $\text{proj}_q a = \frac{\langle q,a \rangle}{\|q\|^2} q$.
We have $B = A(L^T)^{-1}$.

Step 2: Normalization and find Q

Normalization: The process of dividing a vector by its norm to obtain a unit vector. For a vector $\mathbf{v}$, its normalized form is:

$$\mathbf{u} = \frac{\mathbf{v}}{\|\mathbf{v}\|}$$

Orthogonality and $A = QR$

Norm of q_1 q_2 q_3:

$$\|q_1\| = \sqrt{2} \quad \|q_2\| = \sqrt{\frac{3}{2}} \quad \|q_3\| = \sqrt{\frac{4}{3}}$$

Diagonal matrix $D^{-1/2}$:

$$D^{-1/2} = \begin{bmatrix} \frac{1}{\sqrt{2}} & 0 & 0 \\ 0 & \frac{1}{\sqrt{3/2}} & 0 \\ 0 & 0 & \frac{1}{\sqrt{4/3}} \end{bmatrix} = \begin{bmatrix} \frac{1}{\sqrt{2}} & 0 & 0 \\ 0 & \sqrt{\frac{2}{3}} & 0 \\ 0 & 0 & \sqrt{\frac{3}{4}} \end{bmatrix}$$

Orthonormal Matrix Q:

$$Q = BD^{-1/2} = \begin{bmatrix} \frac{1}{\sqrt{2}} & \frac{1/2}{\sqrt{3/2}} & \frac{1/3}{\sqrt{4/3}} \\ -\frac{1}{\sqrt{2}} & \frac{1/2}{\sqrt{3/2}} & \frac{1/3}{\sqrt{4/3}} \\ 0 & -\frac{1}{\sqrt{3/2}} & \frac{1/3}{\sqrt{4/3}} \\ 0 & 0 & -\frac{1}{\sqrt{4/3}} \end{bmatrix} = \begin{bmatrix} \frac{1}{\sqrt{2}} & \frac{1}{\sqrt{6}} & \frac{1}{2\sqrt{3}} \\ -\frac{1}{\sqrt{2}} & \frac{1}{\sqrt{6}} & \frac{1}{2\sqrt{3}} \\ 0 & -\frac{2}{\sqrt{6}} & \frac{1}{2\sqrt{3}} \\ 0 & 0 & -\frac{\sqrt{3}}{2} \end{bmatrix}$$

Orthogonality and $A = QR$

Step3: Substitute $B = A(L^T)^{-1}$ and find R
Derivation:

$$\begin{aligned} Q &= BD^{-1/2} \\ &= A(L^T)^{-1}D^{-1/2} \end{aligned} \xrightarrow{A=QR} \begin{aligned} R &= Q^{-1}A \\ &= D^{1/2}L^T A^{-1}A \\ &= D^{1/2}L^T \end{aligned}$$

Finally get R:

$$R = D^{1/2}L^T = \begin{bmatrix} \sqrt{2} & 0 & 0 \\ 0 & \sqrt{\frac{3}{2}} & 0 \\ 0 & 0 & \sqrt{\frac{4}{3}} \end{bmatrix} \begin{bmatrix} 1 & -\frac{1}{2} & 0 \\ 0 & 1 & -\frac{2}{3} \\ 0 & 0 & 1 \end{bmatrix} = \begin{bmatrix} \sqrt{2} & -\frac{\sqrt{2}}{2} & 0 \\ 0 & \sqrt{\frac{3}{2}} & -\sqrt{\frac{2}{3}} \\ 0 & 0 & \sqrt{\frac{4}{3}} \end{bmatrix}$$

Singular Value Decomposition (SVD) $A = C \sum S^T$

- **Continuous case:** $-\frac{d^2u}{dx^2} = \lambda u$ with boundary conditions $u(0) = 0$ and $u(\pi) = 0 \rightarrow$ Solution: $u(x) = sin(x)$
- **Discrete case:** Eigenfunction $\rightarrow$ discrete sines $s_j(i) = \sin\left(\frac{ij\pi}{n+1}\right)$ for $i = 0, 1, \ldots, n+1$ with boundary conditions $i = 0$ and $i = n+1$.

Discrete Sine Transform Matrix (DST)

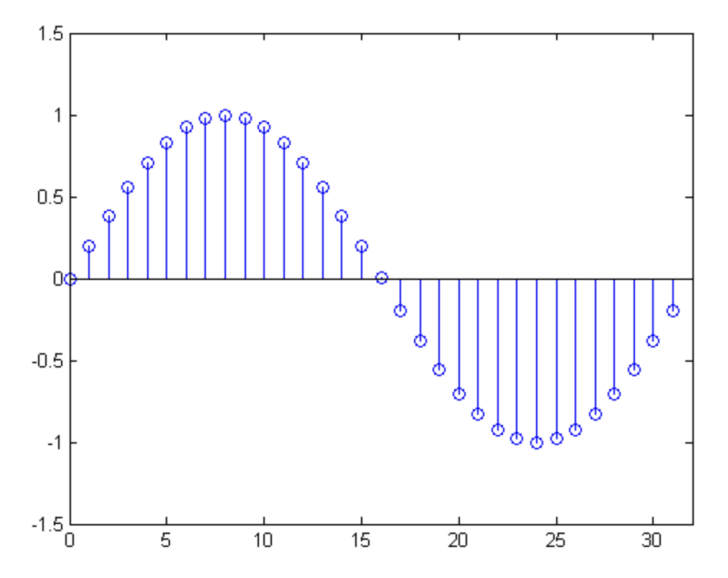

Figure: Discrete sine

$$S = \frac{1}{\sqrt{2}} \begin{bmatrix} \sin\theta & \sin 2\theta & \sin 3\theta \\ \sin 2\theta & \sin 4\theta & \sin 6\theta \\ \sin 3\theta & \sin 6\theta & \sin 9\theta \end{bmatrix}$$

with $\theta = \frac{\pi}{n+1} = \frac{\pi}{4}$.

Singular Value Decomposition (SVD) $A = C \sum S^T$

Similarly, discrete cosines are $c_j(i) = \cos\left(\left(j - \frac{1}{2}\right)\frac{\pi i}{n+1}\right), \quad j = 1, 2, \ldots, n.$

Discrete Cosine Transform Matrix (DCT)

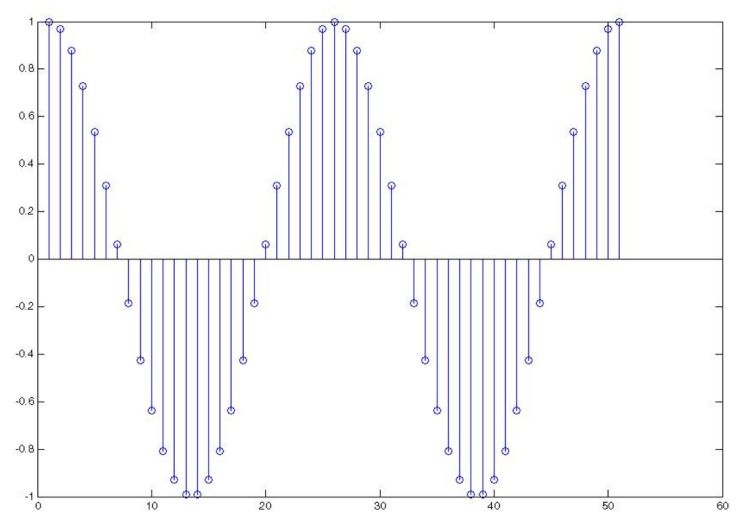

Figure: Discrete cosine

$$C = \frac{1}{\sqrt{2}} \begin{bmatrix} \cos\frac{\theta}{2} & \cos\theta & \cos\frac{3\theta}{2} & \frac{1}{\sqrt{2}} \\ \cos\frac{3\theta}{2} & \cos 3\theta & \cos\frac{9\theta}{2} & \frac{1}{\sqrt{2}} \\ \cos\frac{5\theta}{2} & \cos 5\theta & \cos\frac{15\theta}{2} & \frac{1}{\sqrt{2}} \\ \cos\frac{7\theta}{2} & \cos 7\theta & \cos\frac{21\theta}{2} & \frac{1}{\sqrt{2}} \end{bmatrix}$$

$$\theta = \frac{\pi}{n+1} = \frac{\pi}{4}.$$

Remark: Neumann boundary conditions introduce zero eigenvalues, corresponding to constant patterns, so the last column in C should be $[\frac{1}{\sqrt{2}}, \frac{1}{\sqrt{2}}, \frac{1}{\sqrt{2}}, \frac{1}{\sqrt{2}}]^T$.

Singular Value Decomposition (SVD) $A = C \sum S^T$

The tridiagonal matrix: $T = A^T A = \begin{bmatrix} 1 & -1 & 0 & 0 \\ -1 & 2 & -1 & 0 \\ 0 & -1 & 2 & -1 \\ 0 & 0 & -1 & 1 \end{bmatrix}$

- Solving the Eigen equation $\det(T - \lambda I) = 0$, this results in

$$\lambda_j = 2 - \cos(j\theta) \tag{1}$$

- Since $A^T A$ is semidefinite positive, singular values are represented as

$$\sigma_j = \sqrt{\lambda_j} \tag{2}$$

Therefore, the **singular value matrix** $\sum$ is

$$\Sigma = \begin{bmatrix} \sqrt{2-\sqrt{2}} & 0 & 0 \\ 0 & \sqrt{2} & 0 \\ 0 & 0 & \sqrt{2+\sqrt{2}} \\ 0 & 0 & 0 \end{bmatrix}$$

Singular Value Decomposition (SVD) $A = C \sum S^T$

Summary of the procedure:

$$T = \begin{bmatrix} 1 & -1 & 0 & 0 \\ -1 & 2 & -1 & 0 \\ 0 & -1 & 2 & -1 \\ 0 & 0 & -1 & 1 \end{bmatrix}$$

Extract Eigenvalues

$\det(T-\lambda I)=0$

$T=A^T A$

$$A^T = \begin{bmatrix} 1 & -1 & 0 & 0 \\ 0 & 1 & -1 & 0 \\ 0 & 0 & 1 & -1 \end{bmatrix}$$

$$A = \begin{bmatrix} 1 & 0 & 0 \\ -1 & 1 & 0 \\ 0 & -1 & 1 \\ 0 & 0 & -1 \end{bmatrix}$$

SVD

$A^T = S\Sigma^T C^T$

$A = C\Sigma S^T$

$T=S\Sigma\Sigma^T S^T$

1 Introduction

2 The First Family Matrices

3 The Second Family Matrices
- Physical Background: Complete graph and network problems
- Kirchhoff Matrix and Kirchhoff's Law

4 Reference List

Physical Background: Complete graph and network problems

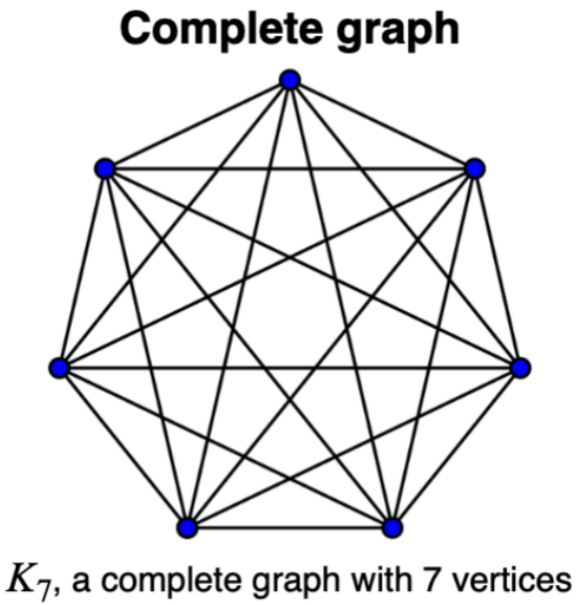

(a) Complete graph

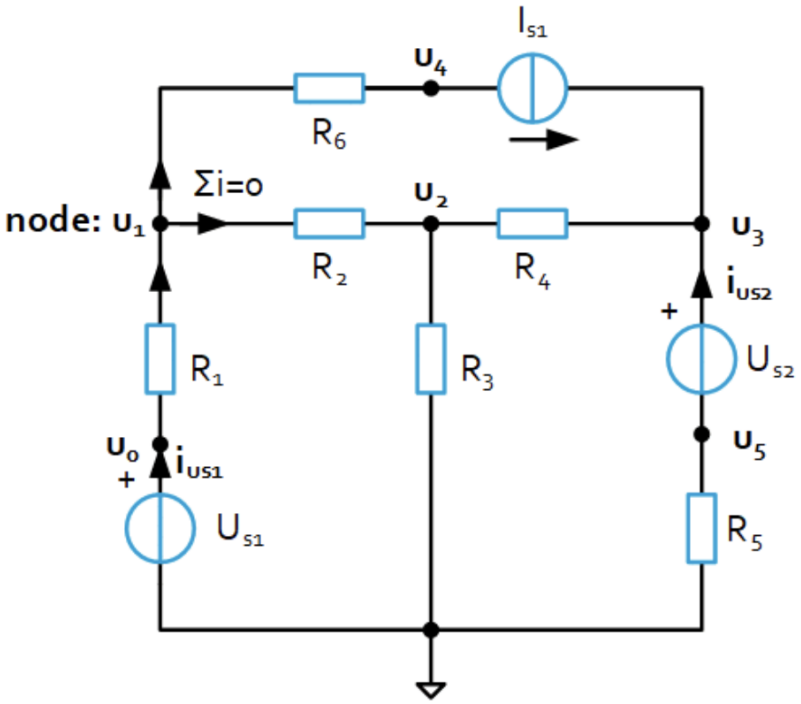

(b) Network of circuit diagram

Kirchhoff Matrix and Kirchhoff's Law

Directed graph	Incidence Matrix	Kirchhoff Matrix
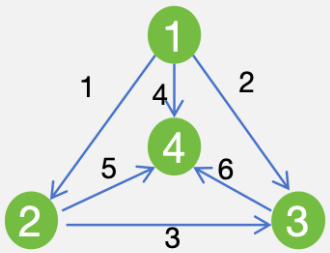	$A_0 = \begin{array}{c} \begin{bmatrix} -1 & 1 & 0 & 0 \\ -1 & 0 & 1 & 0 \\ 0 & -1 & 1 & 0 \\ -1 & 0 & 0 & 1 \\ 0 & -1 & 0 & 1 \\ 0 & 0 & -1 & 1 \end{bmatrix} \\ \text{node} \quad 1 \quad 2 \quad 3 \quad 4 \end{array} \begin{array}{c} \text{edge} \\ 1 \\ 2 \\ 3 \\ 4 \\ 5 \\ 6 \end{array}$	$K_0 = A_0^T A_0 = \begin{bmatrix} 3 & -1 & -1 & -1 \\ -1 & 3 & -1 & -1 \\ -1 & -1 & 3 & -1 \\ -1 & -1 & -1 & 3 \end{bmatrix}$

In physics, Kirchhoff matrix has wide application in Kirchhoff's law, which represents the relationship between voltages at various nodes in a circuit.

Kirchhoff's Law

- Kirchhoff's current law: In the same node, the incoming current = the outgoing current. (Current conservation)
- Kirchhoff's Voltage Law: $\sum V_{\text{total}} = 0$ (Voltage conservation).

Construction of K=$A^T CA$

How can we construct the Kirchhoff Matrix K?

- The general steps:

$$\underset{x}{\text{potentials}} \xrightarrow[A]{} \underset{e}{\text{differences}} \xrightarrow[C]{} \underset{y}{\text{currents}} \xrightarrow[A^T]{} \underset{f}{\text{source}} \qquad \underbrace{\boxed{A^T CA}}_{K} x = f.$$

- key approaches:
  - Gradient Matrix A:

$$\begin{aligned} f_1 &= -y_1 - y_2 - y_4 \\ f_2 &= y_1 - y_3 - y_5 \\ f_3 &= y_2 + y_3 - y_6 \end{aligned} \qquad \text{f} = \begin{bmatrix} -1 & -1 & 0 & -1 & 0 & 0 \\ 1 & 0 & -1 & 0 & -1 & 0 \\ 0 & 1 & 1 & 0 & 0 & -1 \end{bmatrix} \text{y}.$$

  - Connecting one node on the ground:
    $(1,1,1,1) \in \text{Nullspace} K_0$

$$K_0 = A_0^T A_0 \xrightarrow[\text{kick off col4 and row4}]{} \text{K} = \begin{bmatrix} 3 & -1 & -1 \\ -1 & 3 & -1 \\ -1 & -1 & 3 \end{bmatrix}$$

Spanning trees

$$K = \begin{bmatrix} 1 & & \\ -\frac{1}{3} & 1 & \\ -\frac{1}{3} & -\frac{1}{2} & 1 \end{bmatrix} \begin{bmatrix} 3 & & \\ & \frac{8}{3} & \\ & & 2 \end{bmatrix} \begin{bmatrix} 1 & -\frac{1}{3} & -\frac{1}{3} \\ & 1 & -\frac{1}{2} \\ & & 1 \end{bmatrix} = LDL^T$$

Kirchhoff's formula

$\mathrm{Det}(K_{n)} = (n+1)^{(n-1)}$, which counts the number of spanning trees in the network.

A spanning tree connects all nodes to ground, without loops.

For the complete graph with four nodes, there are $4^2 = 16$ spanning trees in total.

4 trees are "stars from a node"

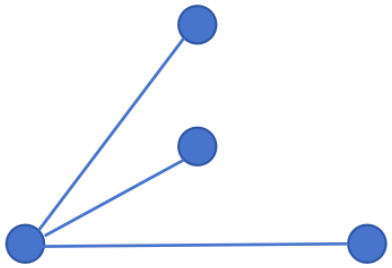

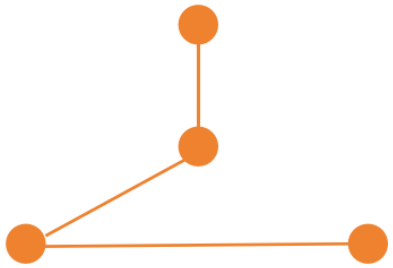

12 trees are "paths"

Application

1. **Network Reliability Analysis: Fault Tolerance and Redundancy**
   - **Spanning Tree Count:**
     Directly reflects network robustness. More spanning trees imply alternative paths when some edges fail.
     - *Example:* In power networks, multiple spanning trees (redundant paths) prevent total failure due to a single line fault.

Application

2. Network Design and Optimization: Communication Networks

- **Minimum Spanning Tree (MST):**
  Used to reduce network construction costs.
  - *Example:* When laying fiber optic cables in cities, select the path combination with the shortest total length.
  - **Avoid Loop Interference:** Use spanning trees to ensure signal paths are loop-free, reducing electromagnetic interference (EMI).

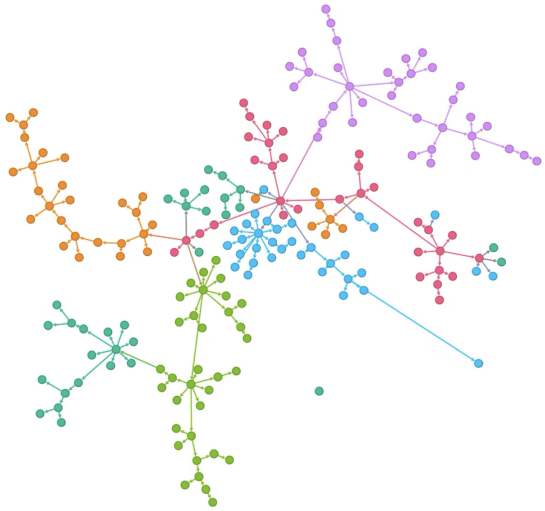

Figure: Complex network system

Summary

Patterns in Two Matrix Families

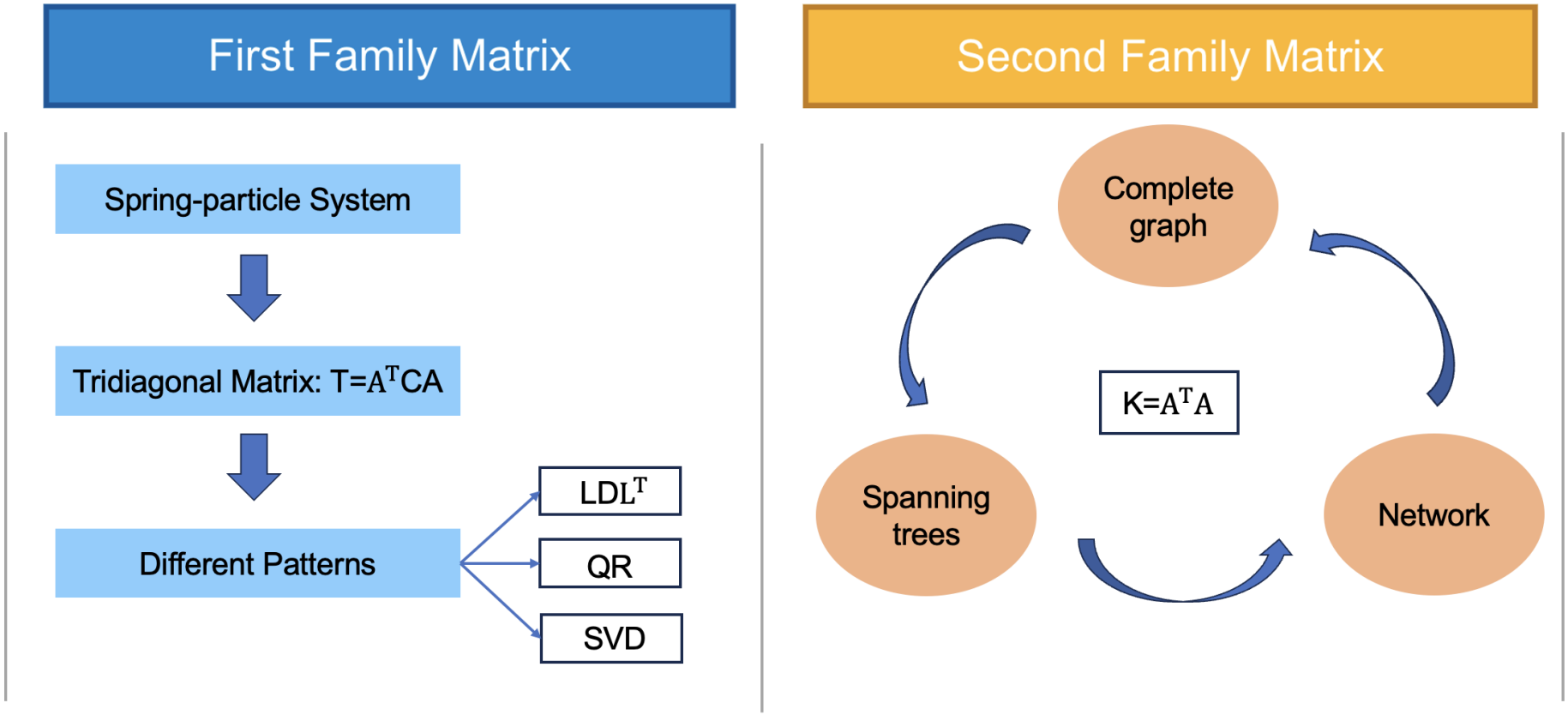

Reference List

[1] Strang, G. (1989). Patterns in linear algebra. The American Mathematical Monthly, 96(2), 105–117.

[2] JPE Innovations. Electrical network analysis: Using nodal method. [Online]. Available: https://www.jpe-innovations.com/precision-point/electrical-network-analysis-using-nodal-method/.

[3] Isaac Physics. Kirchhoff's Laws. [Online]. Available: https://isaacphysics.org/concepts/cp-kirchhoffs-laws.

[4] Wikipedia. (2024). Complete graph. [Online]. Available: https://en.wikipedia.org/wiki/Complete_graph.