# Lexical Analyzer

## Tokenizer

Ahmad Yoosofan
Compiler course
University of Kashan

- https://yoosofan.github.io/course/compiler.html

```
int a, b;
```

- { INT }
- { ID "a" }
- { COMMA }
- { ID "b" }
- { SEMICOLON }

```
  b = 10;
  c = 24;
```

- {ID "b"}
- {ASSIGN}
- {INTEGER, 10}
- {SEMICOLON}
- {END_OF_LINE}
- {ID "c"}
- {ASSIGN}
- {INTEGER, 24}
- {SEMICOLON}

# Ignoring Some Characters

- Depends on Language (c, c++, python)
- Depend on the place of the character (space at the end)
- White space characters (space, tab, new line)
- Old Fortran (Depends on the column of the character)
- Other Consideration (time consuming, memory, etc.)

# Token

```
struct token {
  tokenType t;
  string s;
  double x;
  int a;
};
```

```
struct token {
  tokenType t;
  char s[256];
  double x;
  int a;
};
```

```
struct token {
  tokenType t;
  char* s;
  double x;
  int a;
};
```

```
struct token {
  tokenType t;
  union {
    char* s;
    double x;
    int a;
  };
};
```

```c
struct token {
  tokenType t;
  union {
    char* s;
    double x;
    int a;
  };
};
```

```c
int a, b, count, x1;
```

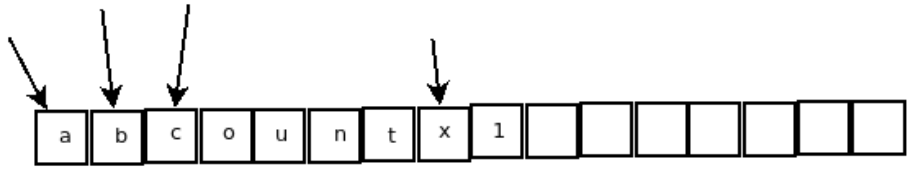

# Token Types

```
enum tokenType{
  INTEGER,              /* 25, 543, 1 */
  DOUBLE,               /* 2.45, 565.7 */
  IDENTIFIER,           /* x, count, power*/
  IF,                   /* if */
  WHILE,                /* while */
  OPEN_PARANTHESIS,     /* ( */
  CLOSE_PARANTHESIS,    /* ) */
  ASSIGN,               /* = */
  OPEN_CURLY_BRACKET,   /* { */
  CLOSE_CURLY_BRACKET,  /* } */
  OPEN_SQUARE_BRACKET,  /* [ */
  CLOSE_SQUARE_BRACKET,/* ] */
  EQUAL,                /* == */
  LESS_THAN,            /* <  */
  GREATER_THAN,         /* > */
  LESS_THAN_EQUAL,      /* <= */
  GREATER_THAN_EQUAL,   /* >= */
  COMMA,                /* , */
  SEMICOLON,            /* ; */
  END_OF_LINE,
  END_OF_FILE
}
```

```
enum tokenType{
  INTN,  /* 25, 543, */
  DBLN   /* 5.444, 3344.4 */,
  ID,    /* x, count, power*/
  IF,    /* if */
  WHILE, /* while */
  OP,    /* ( */
  CP,    /* ) */
  ASG,   /* = */
  OCB,   /* { */
  CCB,   /* } */
  OSB,   /* [ */
  CSB,   /* ] */
  EQ,    /* == */
  LT,    /* <  */
  GT,    /* > */
  LTE,   /* <= */
  GTE,   /* >= */
  COM,   /* , */
  SEM,   /* ; */
  EOL,   /* end of line */
  EOI    /* $ end of input */
}
```

```
enum tokenType{
  INTN,  /* 25, 543, */
  DBLN   /* 5.444, 3344.4 */,
  ID,    /* x, count, power*/
  IF,    /* if */
  WHILE, /* while */
  OP,    /* ( */
  CP,    /* ) */
  ASG,   /* = */
  OCB,   /* { */
  CCB,   /* } */
  OSB,   /* [ */
  CSB,   /* ] */
  EQ,    /* == */
  LT,    /* <  */
  GT,    /* > */
  LTE,   /* <= */
  GTE,   /* >= */
  COM,   /* , */
  SEM,   /* ; */
  EOL,   /* end of line */
  EOI    /* $ end of input */
}
```

```
if(a==4){
   a++;
}
```

- {if}
- {OP}
- {ID, "a"}
- {EQ}
- {INTN 4}
- {CP}
- {OCB}
- {EOL}
- {ID "a"}
- {PLUS}
- {PLUS}
- {SEMI}
- {EOL}
- {CCB}
- {EOI}

# More Samples

```
printf("Error");
```

- ID, printf
- OP,
- CS, Error
- CP,
- SEM

```
a = '"';
```

- ID, a
- ASG,
- CC, "
- SEM,

```
a = 2; // slfjsl slkjfsl slkjf sdf
b = a+21;/* dsf
sdfs
sdfs */
c = 323;
```

- ID, a
- ASG
- INTN, 2
- SEM
- ID, b
- ASG,
- ID, a
- PLUS,
- INTN, 21
- SEM,
- ID, c
- ASG,
- INTN, 323
- SEM

# Some Issues

- >>
  - i >> 2
  - cin >> a;
- > >
  - array<int,Node<int> >m1(10);
  - array<int,Node<int>>m1(10);
  - template<T, template<K> >
  - template<T, template<K>>

```
1   array<int,Node<int> >m1;
2   int aa=12; Node<int> n1(&aa);
3   m1[n1]=44;
4   cout<<m1[n1]<<endl;
5   aa=4;m1[Node<int>(&aa)]=4;
6   cout<<m1[Node<int>(new int(4))]<<endl;
7   try{
8     array<int,string,1> cm1; array<string,complexCls> am1;
9     cm1["ali"]=4;
10     cm1["Reza"]=7;
11     cout<<cm1["ali"]<<endl;
12     cout<<cm1["Reza"]<<endl;
13     am1[complexCls(3,4)]="Hamid";
14
15     cout<<am1[complexCls(3,4)]<<endl;
16     cout<<cm1;  cout<<am1;
17   }catch(...){cout<<"Error "<<endl;}
18 }
```

# Writing Code

## Applications of Lexical Analyzer

- Editors
  - geany , https://github.com/geany/geany
  - zed.dev , zed github
  - Atom Atom github
  - LPG2
    - Eclipse IDE

# Relational Operators

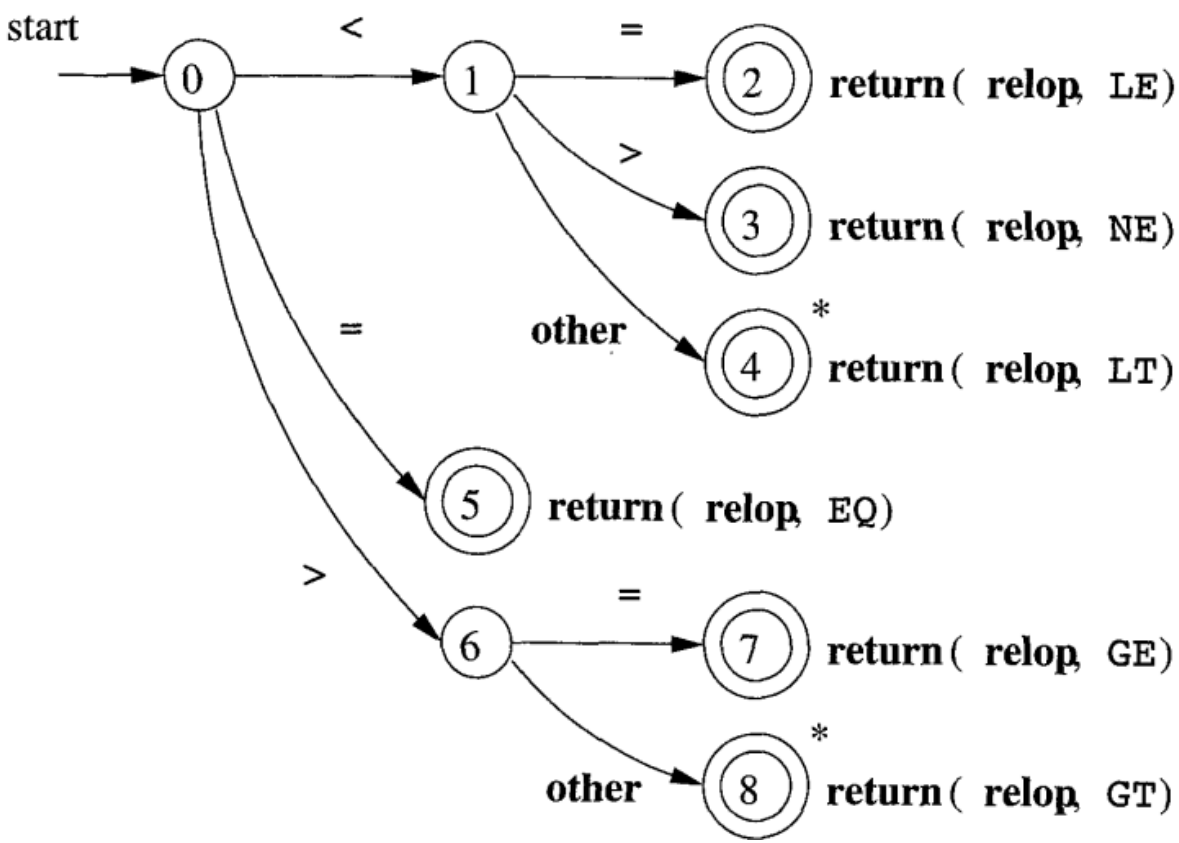

# ID

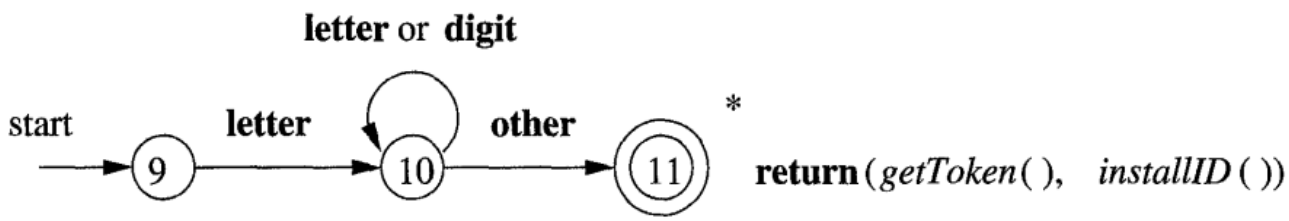
letter or digit
start
letter
other
*
9
10
11
return(getToken(), installID())

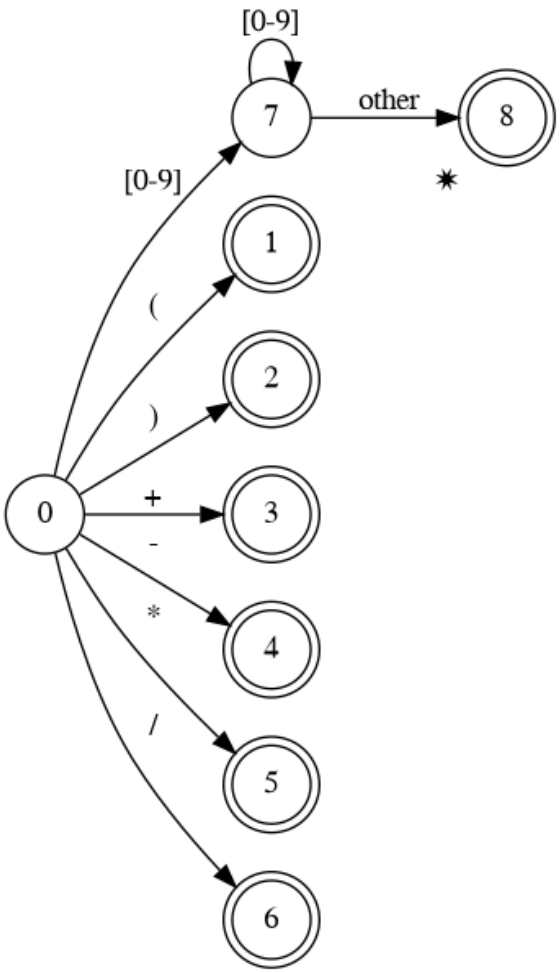
[0-9]
7
other
8
*
[0-9]
1
(
2
)
0
+
3
-
*
4
/
5
6

```
12 char buffer[200];
13 int tindex =0;
14
15 void read(void){
16   cout << "Enter: ";
17   cin.get(buffer, 200);
18 }
19
20 enum TokenType{
21   INT, PLUS, MINUS, MUL,
22   DIV, OP, CP, EOI
23 };
24
25 struct Token{
26   TokenType type;
27   int n;
28 };
```

```
30 void printToken(Token t){
31   cout<< "tindex: "<< tindex
32     << "\t type: "
33     <<typeString[int(t.type)]
34     <<"\t int "<< t.n << endl;
35 }
36
37 Token getToken(void);
38
39 int main(){
40   Token t; read();
41   do{
42     t=getToken();
43     printToken(t);
44   }while(t.type != EOI);
45 }
```

```
  Token  t; t.n = 0;
  if(buffer[tindex] == '(')        t.type = OP;
  else if(buffer[tindex] == ')')   t.type = CP;
  else if(buffer[tindex] == '+')   t.type = PLUS;
  else if(buffer[tindex] == '-')   t.type = MINUS;
  else if(buffer[tindex] == '*')   t.type = MUL;
  else if(buffer[tindex] == '/')   t.type = DIV;
  else if(buffer[tindex] == '\0')  t.type = EOI;

  else if(buffer[tindex]>='0' && buffer[tindex]<='9'){
    t.type=INT; t.n = 0;
    for(; buffer[tindex] >= '0' && buffer[tindex] <= '9'; tindex++)
        t.n=t.n*10+buffer[tindex]-48;
    tindex --;
  }
  else  error("unknown character");
  tindex++;
  return t;
}
```

```
enum TokenType{
  INT, PLUS, MINUS, MUL,
  DIV, OP, CP, EOI
};
struct Token{
  TokenType type;
  int n = 0;
};

void error(const string msg)
{cout<<msg<<endl; throw 0;}

class lexical{
  Token  t;
  char buffer[200];
  int tindex = 0;

  public:

  void read(){
    cout << "Enter: ";
    cin.get(buffer,200);
  }
```

```
  void printToken(Token t){
    cout<< "tindex: "<< tindex
      << "\t type: "
      <<typeString[int(t.type)]
      <<"\t int "<< t.n << endl;
  }

  Token getToken();
};

int main(){
  lexical lex1;
  Token t;
  lex1.read();
  do{
    t=lex1.getToken();
    lex1.printToken(t);
  }while(t.type != EOI);
}
```

```
Token lexical::getToken(){
  t.n = -1;
  if(buffer[tindex] == '(')        t.type = OP;
  else if(buffer[tindex] == ')')   t.type = CP;
  else if(buffer[tindex] == '+')   t.type = PLUS;
  else if(buffer[tindex] == '-')   t.type = MINUS;
  else if(buffer[tindex] == '*')   t.type = MUL;
  else if(buffer[tindex] == '/')   t.type = DIV;
  else if(buffer[tindex] == '\0')  t.type = EOI;

  else if(buffer[tindex]>='0' && buffer[tindex]<='9'){
    t.type=INT; t.n = 0;
    for(; buffer[tindex] >= '0' && buffer[tindex] <= '9'; tindex++)
        t.n=t.n*10+buffer[tindex]-48;
    tindex --;
  }
  else    error("unknown character");
  tindex++      ;
  return t;
}
```

# Keywords(I)

then

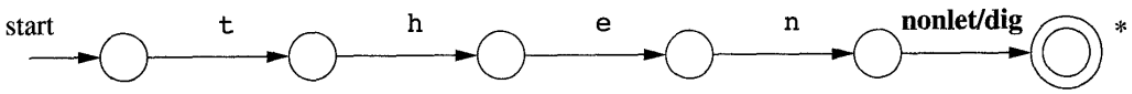

# Keywords(II)

English Words

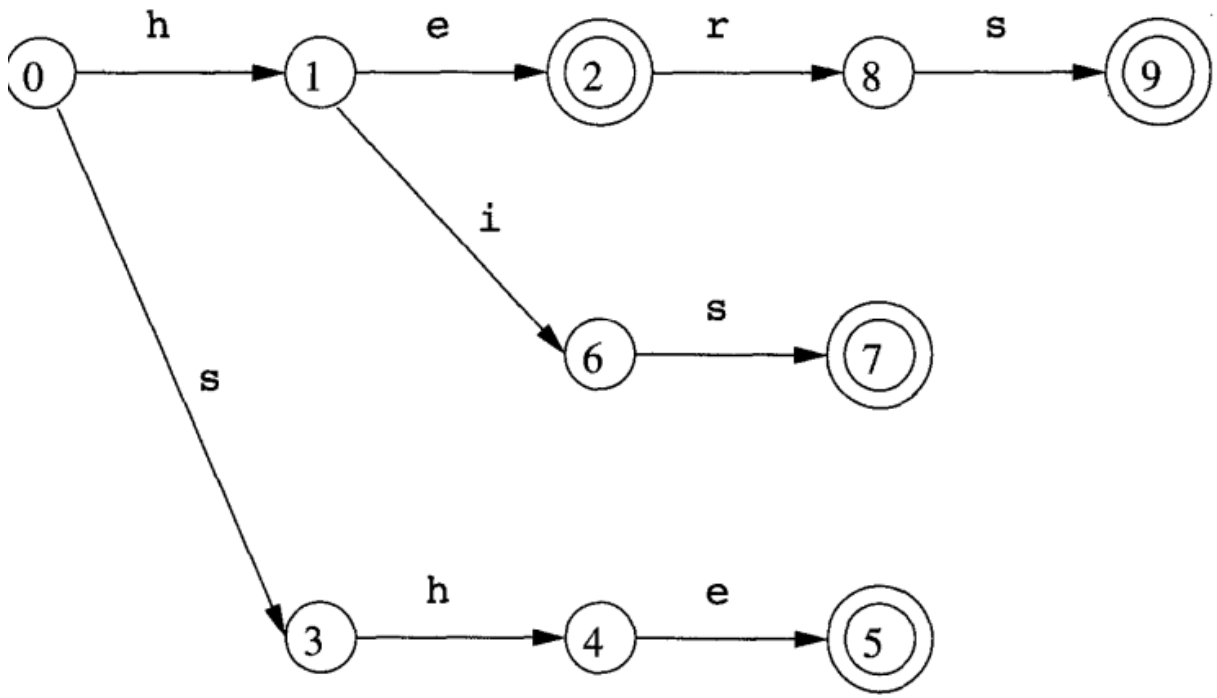

# Number

1, 322, 34.34, 34E3, 34E-3

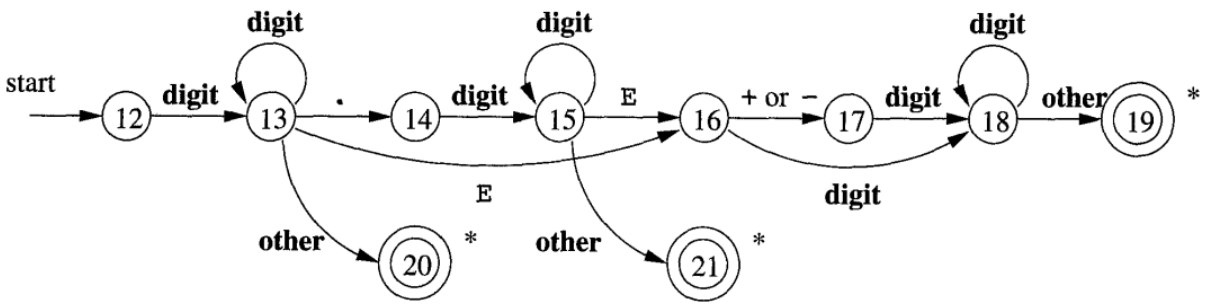

# Delimiter

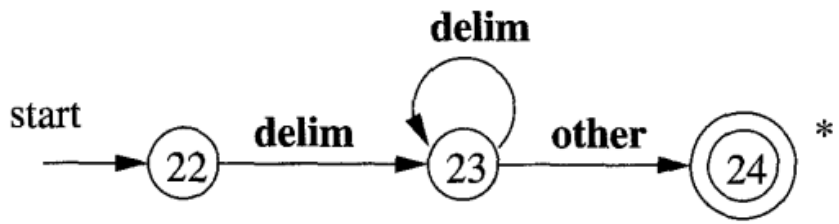

# Psudo Code

```
TOKEN getRelop()
{
    TOKEN retToken = new(RELOP);
    while(1) { /* repeat character processing until a return
                  or failure occurs */
        switch(state) {
            case 0: c = nextChar();
                    if ( c == '<' ) state = 1;
                    else if ( c == '=' ) state = 5;
                    else if ( c == '>' ) state = 6;
                    else fail(); /* lexeme is not a relop */
                    break;
            case 1: ...
            ...
            case 8: retract();
                    retToken.attribute = GT;
                    return(retToken);
        }
    }
}
```

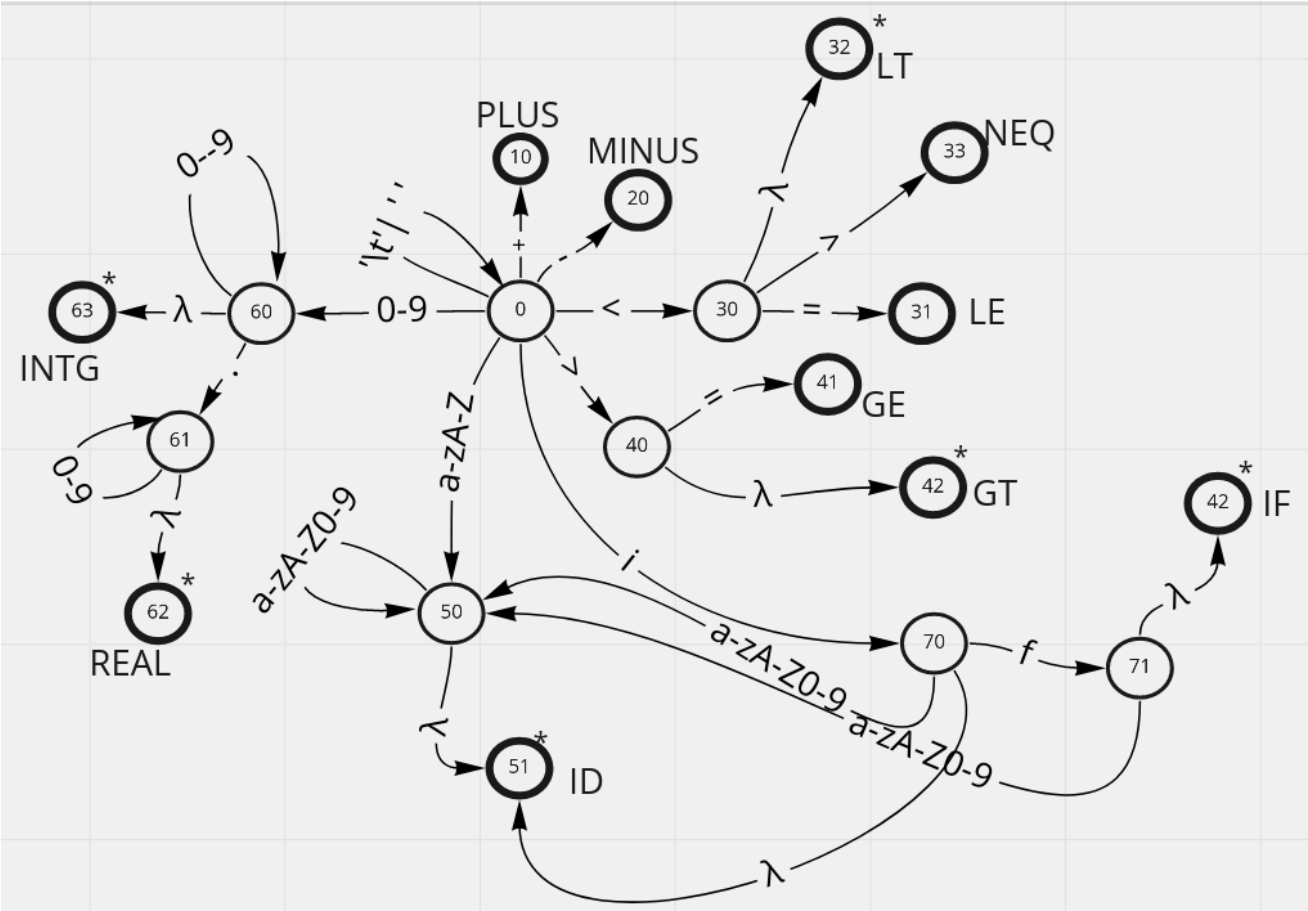
0
10
PLUS
20
MINUS
30
31
LE
32
LT
33
NEQ
40
41
GE
42
GT
60
61
62
REAL
63
INTG
50
51
ID
70
71
42
IF
0-9
'\t'|' '
+
-
<
=
>
λ
.
a-zA-Z
a-zA-Z0-9
i
f

# Symbol Table

```
a = 2
count = count + a
```

- ID, "a"
- ASG
- NINT, 2
- EOL
- ID, "count"
- ASG
- ID, "count"
- PLUS
- ID, "a"
- EOL

| Name | Type | Value |
|---|---|---|
| a | ID | |
| count | ID | |

- ID, 0
- ASG
- NINT, 2
- EOL
- ID, 1
- ASG
- ID, 1
- PLUS
- ID, 0
- EOL

# Keywords in Symbol Table

| Name | Type |
|---|---|
| if | IF |
| while | WHILE |
| int | INT |
| ... | ... |
| a | ID |
| count | ID |

```
a = 2
count = count + a
```

```
a = 2\ncount = count + a\0
```

```
|a| |=| |2|\n|c|o|u|n|t| |=| |c|o|u|n|t| |+| |a|\0|
```

```
enum Type{ID,INT,DOUBLE,LT,LE,WHILE,IF, RETURN, A
struct Token{
  Type t;  char *str; int  i;
  double d; int line,pos;
};
class symboleTable{
  struct stCls{char name[32]; Type t;};
  public: int n; stCls table[2000];
  symboleTable(){n=0;
    table[n].t=IF;     strcpy(table[n++].name,"i
    table[n].t=WHILE;  strcpy(table[n++].name,"w
    table[n].t=INT;    strcpy(table[n++].name,"i
    table[n].t=DOUBLE; strcpy(table[n++].name,"d
    table[n].t=RETURN; strcpy(table[n++].name,"r
  }
  int search(char *bf, int begin, int end, Type
    int i=0;
    for(i=0;i<n;i++){int j;
      for(j=0;table[i].name[j];j++)
        if(bf[begin+j]!= table[i].name[j])  brea
      if(!table[i].name[j] && begin+j == end)
      {t1=table[i].t; return i;}
    }
    for(i=0;begin+i<end;i++) table[n].name[i]=bf
    table[n].name[i]=0; t1=table[n].t=ID; n++;
    return n-1;
  }
};
```

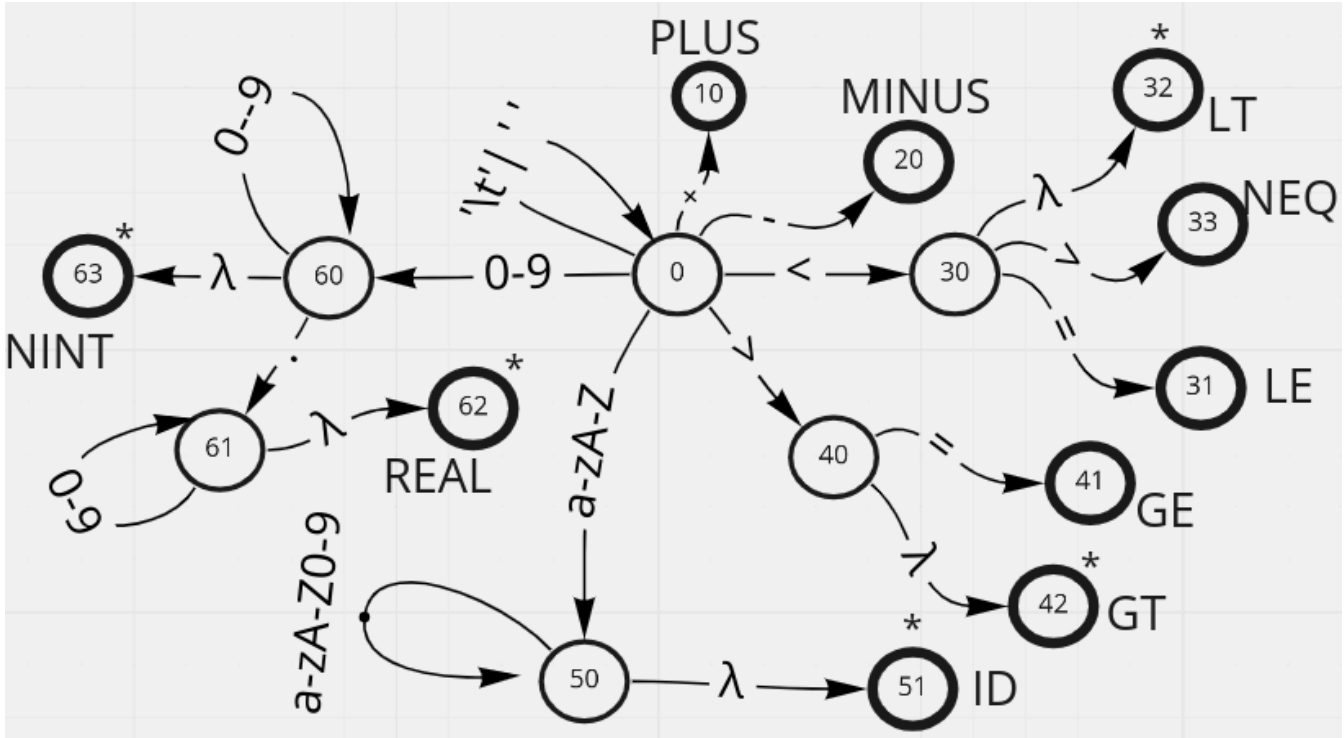
PLUS
10
MINUS
20
*
32
LT
NEQ
33
LE
31
GE
41
*
42
GT
*
51
ID
50
a-zA-Z0-9
a-zA-Z
0
0-9
'\t'|' '
+
-
<
>
=
λ
30
40
60
0--9
.
61
0-9
λ
*
62
REAL
*
63
NINT

```
1 #include <iostream>
2 #include <fstream>
3 #include <cstdlib>
4 #include <cstring>
5 #include <cctype>
6 using namespace std;
7 enum Type {IF,WHILE, INT,DOUBLE,RETURN, ID, LT,LE,ASG, END_INPUT};
8 struct Token{Type t;  char *str=nullptr;  int  i=0; int line,pos;
9     void print(void){cout << t << ":\t" << str << ":\t" << i << endl;}
10 };
11 class symboleTable{
12   struct stCls{ char name[32]; Type t;};
13   public:   int n = 0;   stCls table[2000];
14   symboleTable(){
15     table[n].t=IF;     strcpy(table[n++].name,"if");
16     table[n].t=WHILE;  strcpy(table[n++].name,"while");
17     table[n].t=INT;    strcpy(table[n++].name,"int");
18     table[n].t=DOUBLE; strcpy(table[n++].name,"double");
19     table[n].t=RETURN; strcpy(table[n++].name,"return");
20   }
21   char* search(char *bf, int begin, int end, Type &t1){ int i,j;
22     for(i=0; i<n; i++){
23       for(j=0; table[i].name[j] && begin+j <= end; j++)
24         if(bf[begin+j] != table[i].name[j]) break;
25       // cout << "begin+j: " << begin+j << "\t" << end << "\t" << bf[begin+j] << endl;
26       if(!table[i].name[j] && begin+j-1 == end)
27       {t1=table[i].t; return table[i].name; }
28     }
29     for(i=0;begin+i<=end;i++)  table[n].name[i]=bf[begin+i];
30     table[n].name[i]=0;  t1=table[n].t=ID; n++;
31     return table[n-1].name;
32   }
33   void print(void){for(int i = 0; i < n; i++) cout << table[i].name << endl;}
34 };
```

```
35 class scanner{ static const int N=200000; public:
36   symboleTable smt;
37   char buffer[N];  int begin,end,lineno,pos;
38   scanner(const char *fileName="pr1.c"){
39     ifstream f1(fileName);
40     if(!f1){cout<<"file"; throw 0;}
41     f1.seekg(0,ios::end); long long t1=f1.tellg(); f1.seekg(0,ios::beg);
42     f1.read(buffer,t1);  f1.close(); begin=end=lineno=pos=0;
43   }
44   Token getToken(void){Token t;
45     for(;buffer[begin]==' ' || buffer[begin]=='\n'|| buffer[begin]=='\t'; begin++)
46       if(buffer[begin]=='\n')  lineno++;
47     end=begin;
48     if(isalpha(buffer[begin]) || buffer[begin]=='_'){  end ++;
49       while(isalnum(buffer[end]) || buffer[end]=='_')  end++;
50       end--; t.str=smt.search(buffer, begin, end, t.t);
51     } //  cout<< buffer[begin] << " ::: " << buffer[end] << endl;
52     else if(isdigit(buffer[begin])){cout << " Unexpected numeric input: "; throw 1; }
53     else if(buffer[begin]=='"'){cout << " Unexpected quotation mark input: "; throw 1;}
54     else
55       switch(buffer[begin]){
56         case '<':
57           end++;
58           if(buffer[end]=='=') t.t=LE;
59           else{end--;t.t=LT;}
60         break;
61         case '=': end++; t.t=ASG; break;
62         case 0 : t.t = END_INPUT; break;
63         default: cout << " Unexpected quotation mark input: "; throw 1;
64       }
65     pos=begin; if(t.t != END_INPUT) begin=++end;  return t;
66   }
67 };
68 int main(){Token t1;scanner s1;t1=s1.getToken();
69   while(t1.t != END_INPUT){t1.print(); t1=s1.getToken();}
70   s1.smt.print();
71 }
```

# Memory Allocation

| Name | Type | Value |
|---|---|---|
| 0 | IF | |
| 2 | WHILE | |
| 7 | INT | |
| 10 | ID | |
| 11 | ID | |

| | | | | | | | | | | | | | | | | |
|---|---|---|---|---|---|---|---|---|---|---|---|---|---|---|---|---|
| i | f | w | h | i | l | e | i | n | t | a | c | o | u | n | t | \0 |
| 0 | 1 | 2 | 3 | 4 | 5 | 6 | 7 | 8 | 9 | 10 | 11 | 12 | 13 | 14 | 15 | 16 |

# Regular Expression

1. 0|1|2|3 : 0 or 1 or 2 or 3
2. [0123] : 0 or 1 or 2 or 3
3. [0-3] : 0 or 1 or 2 or 3
4. [-03] : 0 or - or 3
5. (abc) : Capture group abc
6. (a|b) : Match a or b
7. . : Any character, except newline
8. \. * \ \t \n \r \-
9. [0\-3] : 0 or - or 3
10. \w : Word
11. \d : digit
12. ^ : start of String
13. ^abc : Start with abc
14. $ : End of string
15. abc$ : End with abc
16. [ \t] : space or tab
17. [\n\t] : new line or tab

1. a+ : Match 1 or more a
2. [0-9]+
3. a* : Match 0 or more a
4. [a-zA-Z_][a-zA-Z_]*
5. [a-zA-Z_]+
6. a? : Match 0 or 1 of a
7. if(def)?
8. [0-9]+(\.[0-9]+)?
9. a{3} : Match exactly 3 , aaa
10. a{1,3} : Match between 1 and 3
11. a{,3} : Match up to 3
12. a{3,} : Match 3 or more
13. [^abc] : Any character except a, b or c
14. [^\n] : . , scanf("[^\n]", st);
15. [a^c] : one of: a ^ c
16. a/b : a when followed by b
17. (abc)/(xyz) : abcsldsxyzss , abcsldsxzss ×
18. (https?|ftp):/(/[^/\r\n]+)+/?

https://yoosofan.github.io/course/

# Some References of Regular Expression

- https://stackoverflow.com/a/3513858
- https://web.cs.hacettepe.edu.tr/~bbm301/lectures/lecture3_lex.pdf
- https://devhints.io/regexp
- https://web.mit.edu/hackl/www/lab/turkshop/slides/regex-cheatsheet.pdf
- https://developer.mozilla.org/en-US/docs/Web/JavaScript/Guide/Regular_Expressions/Cheatsheet
- https://developer.mozilla.org/en-US/docs/Web/JavaScript/Guide/Regular_Expressions/Cheatsheet#character_classes
- https://www.rexegg.com/regex-quickstart.html
- https://cheatography.com/davechild/cheat-sheets/regular-expressions/

# Online Regular Expression Tools

- https://regex101.com/
- https://regexr.com/
- https://www.regextester.com/
- https://www.freeformatter.com/regex-tester.html
- https://extendsclass.com/regex-tester.html
- https://www.debuggex.com/
- https://developer.mozilla.org/en-US/docs/Web/JavaScript/Reference/Global_Objects/RegExp/test
- https://appdevtools.com/regular-expression-tester
- https://www.regular-expressions.info/javascriptexample.html
- https://ihateregex.io/

# Regular Expression in Programming(re/regex)

- C++
  - https://en.cppreference.com/w/cpp/regex
  - https://www.cplusplus.com/reference/regex/
  - https://www.geeksforgeeks.org/regex-regular-expression-in-c/
- Python
  - https://docs.python.org/3/library/re.html
  - https://www.tutorialspoint.com/python/python_reg_expressions.htm
  - https://www.w3schools.com/python/python_regex.asp
  - https://developers.google.com/edu/python/regular-expressions
  - https://www.programiz.com/python-programming/regex
  - https://realpython.com/regex-python/
  - https://www.geeksforgeeks.org/regular-expression-python-examples-set-1/
- Javascript
  - https://developer.mozilla.org/en-US/docs/Web/JavaScript/Guide/Regular_Expressions
  - https://www.w3schools.com/js/js_regexp.asp
  - https://www.programiz.com/javascript/regex
  - https://www.javascripttutorial.net/javascript-regular-expression/
  - https://eloquentjavascript.net/09_regexp.html

Next topic LEX