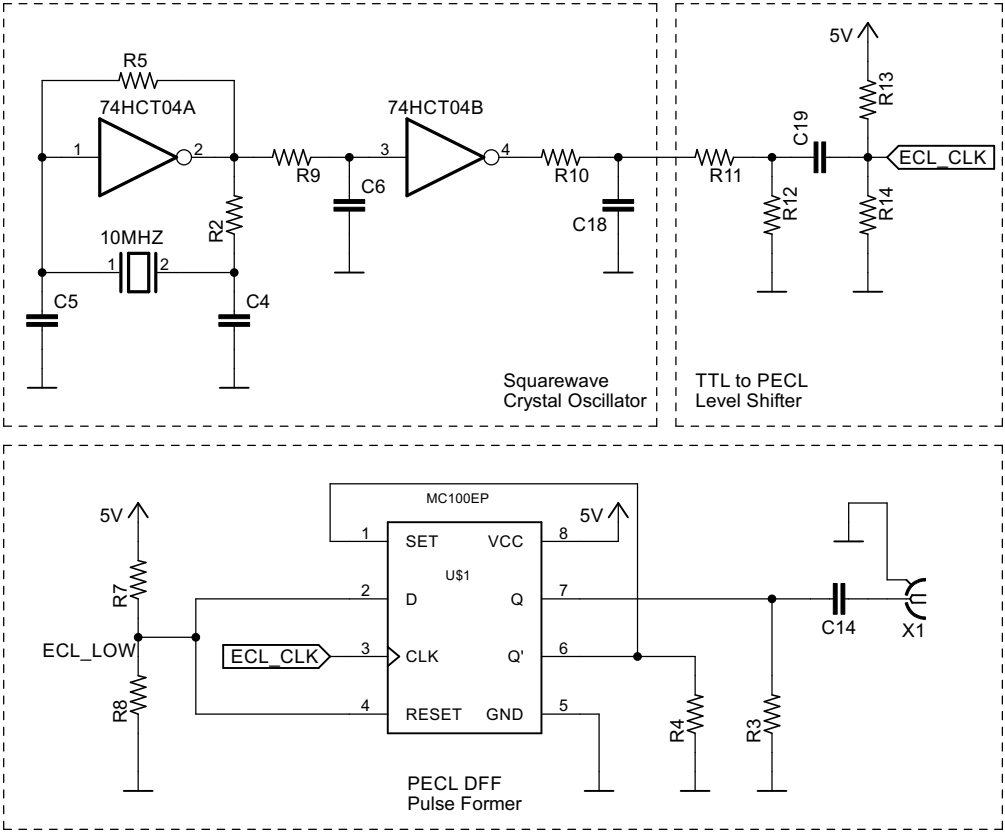
R5
74HCT04A
1
2
R2
10MHZ
1
2
C5
C4
R9
C6
74HCT04B
3
4
R10
C18
Squarewave
Crystal Oscillator
5V
R13
C19
R11
R12
R14
ECL_CLK
TTL to PECL
Level Shifter
MC100EP
5V
1
SET
VCC
8
U$1
2
D
Q
7
ECL_CLK
3
CLK
Q'
6
4
RESET
GND
5
5V
R7
ECL_LOW
R8
R4
R3
C14
X1
PECL DFF
Pulse Former