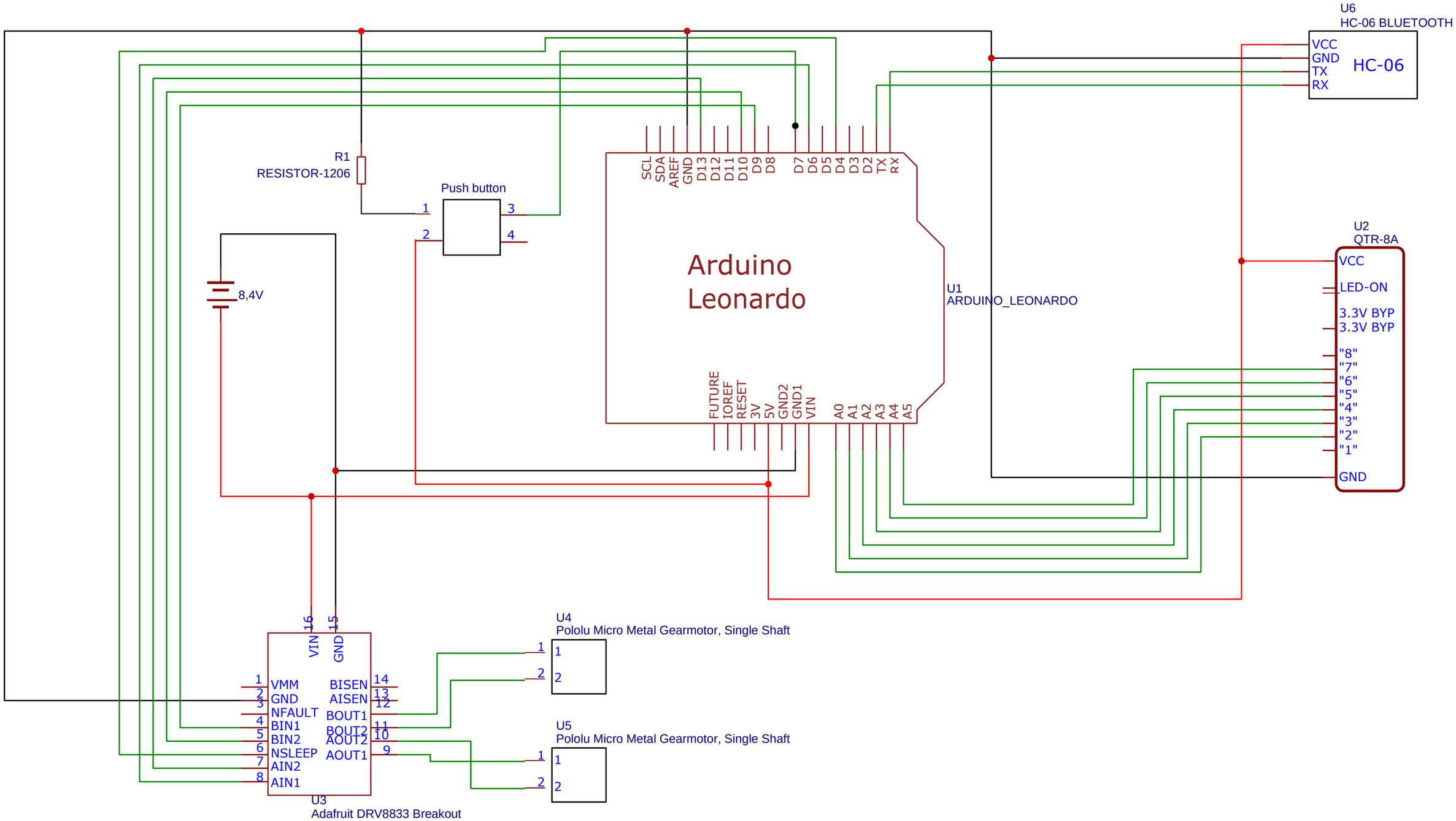

TITLE: Synheseproject		REV:
EasyEDA	Company:	Sheet: 1/1
	Date: 2023-11-30 Drawn By: Yorben D'Hondt	