Multidisciplinary project

Solving differential problems with Photonic Neural Networks

Yosef Ben Chedly

Politecnico di Milano
High Performance Computing Engineering

09/02/2026

Goals

- Combine physics-based models with data-driven models on photonic architectures
- Demonstrate a hardware-aligned training pipeline for unsupervised learning tasks

Motivations

- Partial differential equations are fundamental to advancing scientific research
- Complex simulations can require substantial resources on traditional HPC systems

An example: simulating the cardiac function

A heartbeat lasts on average 1 second. One single run requires:

- A spatial mesh with at least 1.7 million nodes
- About 20 million spatial degrees of freedom (PDE unknowns per time step)
- 16,000 time steps to resolve the dynamics for a total of 700B variables for the space-time solver
- 1,152 CPU cores on the GALILEO100 supercomputer
- Approximately 4 hours of wall-clock time
- An estimated cost of $2,000
- Around 100 kWh of energy consumption
- About 35 kg of CO_2 emissions

Where Photonics fits

Digital training is bottlenecked by energy and data movement:

- Interferometer meshes implement fast linear transforms consuming low energy
- Adjoint signals generated in-situ enable more efficient updates

Key point

Photonic devices and adjoint methods are a natural match: they provide both energy efficiency and locality.

Deep Ritz algorithm ingredients

- A neural network to approximate u;
- A quadrature rule to approximate the integral I(u) (Monte Carlo sampling);
- An optimization algorithm to solve the optimization problem.

Deep Ritz algorithm

$$\min_{\theta} \mathcal{L}_{\mathrm{DR}}(\theta), \quad \mathcal{L}_{\mathrm{DR}}(\theta) = \mathrm{I}[\mathrm{u}_\theta]$$

$$\mathrm{I}[\mathrm{u}] = \int_0^1 \tfrac{1}{2}|\nabla \mathrm{u}|^2 \mathrm{dx} - \int_0^1 \mathrm{fu}\,\mathrm{dx}$$

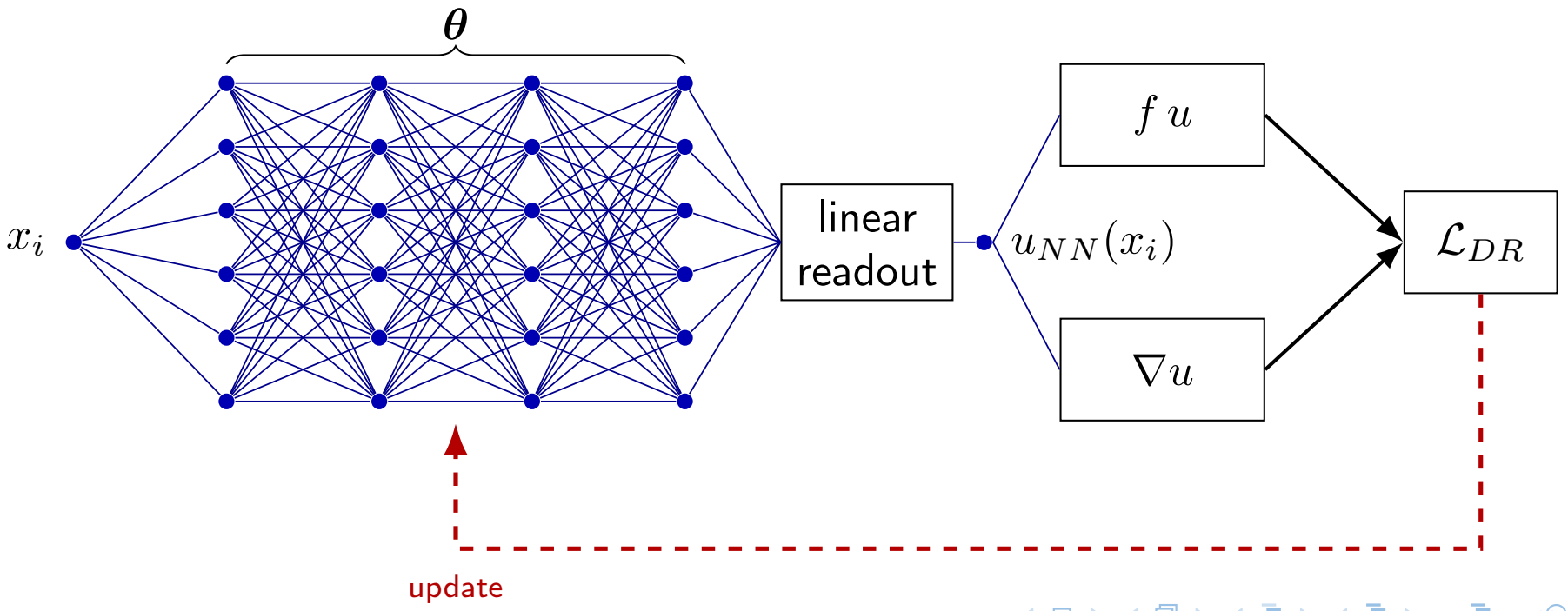

Photonic FFNNs

- Alternates linear maps and nonlinear activations
- Nonlinear activations are digital (alternatives for future work)

For layers $\ell = 1, \ldots, \mathrm{L}$:

$$\mathrm{X}_\ell = \boldsymbol{\phi}_\ell(\hat{\mathrm{W}}_\ell \, \mathrm{X}_{\ell-1}) \equiv \boldsymbol{\phi}_\ell(\mathrm{Y}_\ell)$$

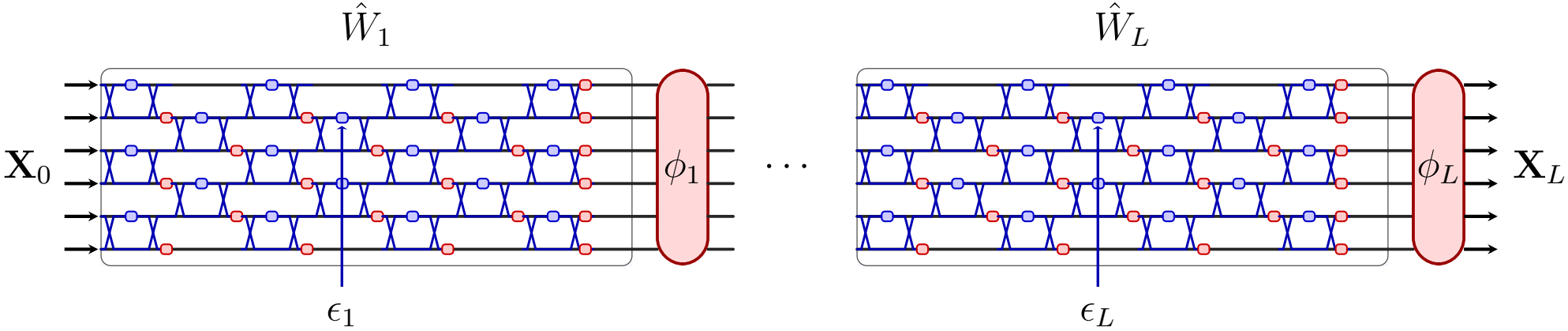

Clements mesh topology

- Universal $N \times N$ unitary implementation
- Requires $\frac{N(N-1)}{2}$ MZIs
- Programmable via integrated phase shifters

(a) Forward propagation

$$\hat{W} = D\,\hat{W}^{\#}$$

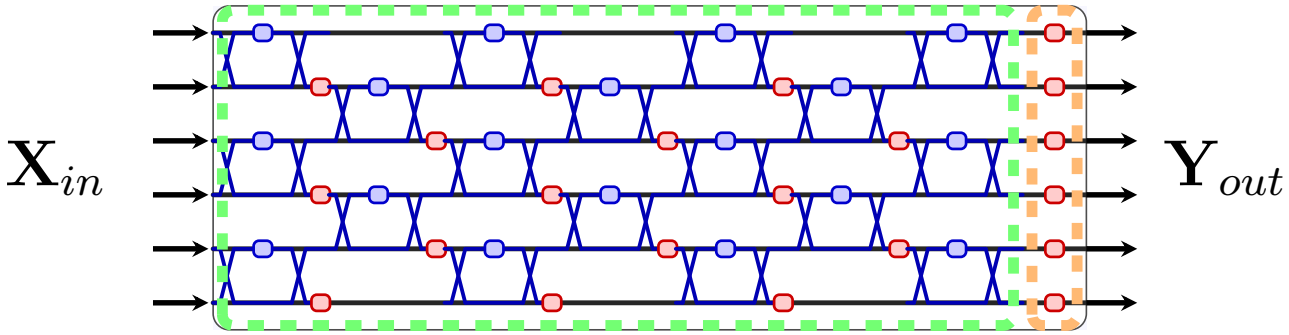

(b) Backward propagation

$$\hat{W}^{T} = (\hat{W}^{\#})^{T}\,D$$

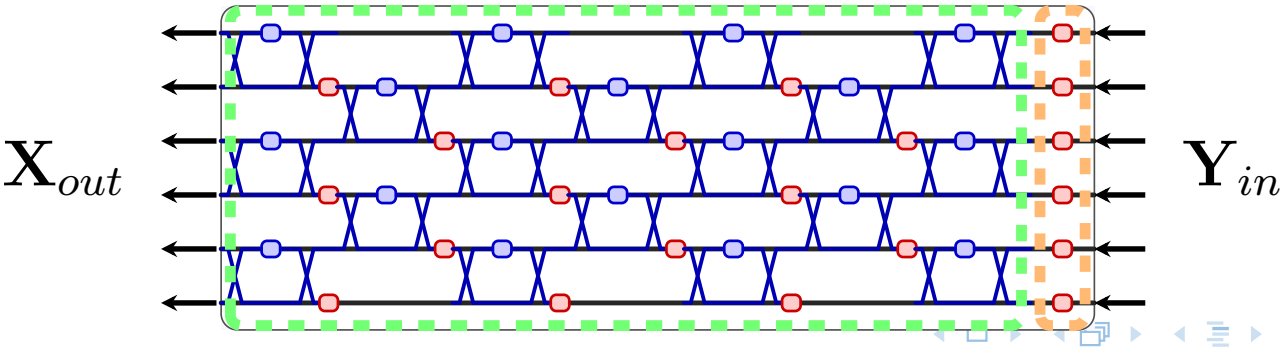

Gradients as overlap of electric fields

$$\frac{\partial \mathcal{L}_{\mathrm{MS}}}{\partial \varepsilon_\ell} = \mathrm{k}_0^2 \,\mathrm{Re}\left\{ \sum_{\mathrm{r}^\ell \in \mathrm{r}^\ell_{\mathrm{ps}}} \left[\mathrm{e}^{\leftarrow}_\ell(\mathrm{r}^\ell)\right]^\top \mathrm{e}^{\rightarrow}_\ell(\mathrm{r}^\ell) \right\}$$

- Forward field $\mathrm{e}^{\rightarrow}_\ell$
- Adjoint (backpropagated) field $\mathrm{e}^{\leftarrow}_\ell$

Advantage: massive parallelism

The correction to the parameters is encoded in the brightest points in the circuit.

Measuring the overlap between the forward and adjoint fields

Local intensity from interference:

$$\mathrm{I}^{\ell} = \left|\mathrm{e}_{\ell}^{\rightarrow} + (\mathrm{e}_{\ell}^{\leftarrow})^{*}\right|^{2} = \left|\mathrm{e}_{\ell}^{\rightarrow}\right|^{2} + \left|\mathrm{e}_{\ell}^{\leftarrow}\right|^{2} + 2\,\mathrm{Re}\{\mathrm{e}_{\ell}^{\rightarrow} \cdot \mathrm{e}_{\ell}^{\leftarrow}\},$$

$$2\,\mathrm{Re}\{\mathrm{e}_{\ell}^{\rightarrow} \cdot \mathrm{e}_{\ell}^{\leftarrow}\} = \mathrm{I}^{\ell} - \mathrm{I}_{\ell}^{\rightarrow} - \mathrm{I}_{\ell}^{\leftarrow},$$

where

$$\mathrm{I}_{\ell}^{\rightarrow} = |\mathrm{e}_{\ell}^{\rightarrow}|^{2}, \quad \mathrm{I}_{\ell}^{\leftarrow} = |\mathrm{e}_{\ell}^{\leftarrow}|^{2}$$

are measured separately.

Analog backpropagation algorithm

1. Forward pass

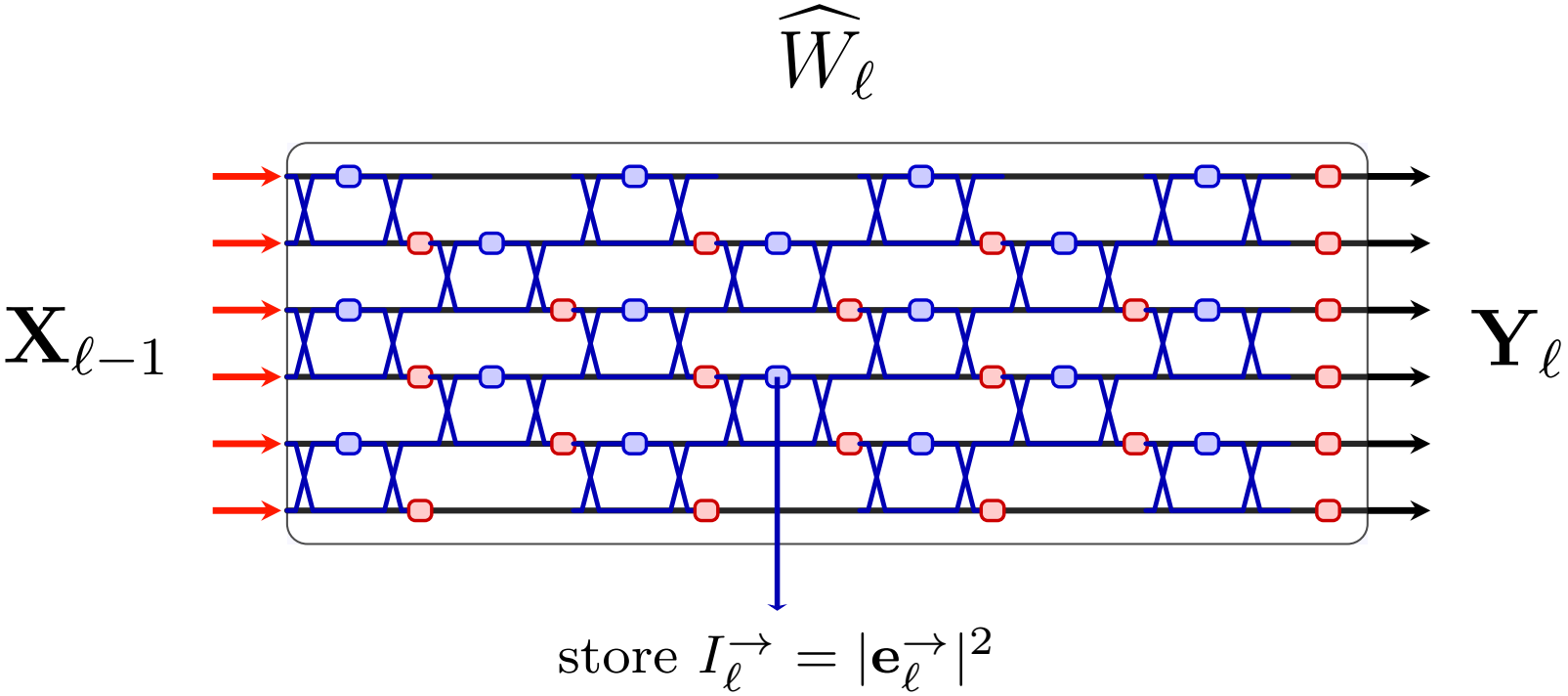

Analog backpropagation algorithm

2. Adjoint pass

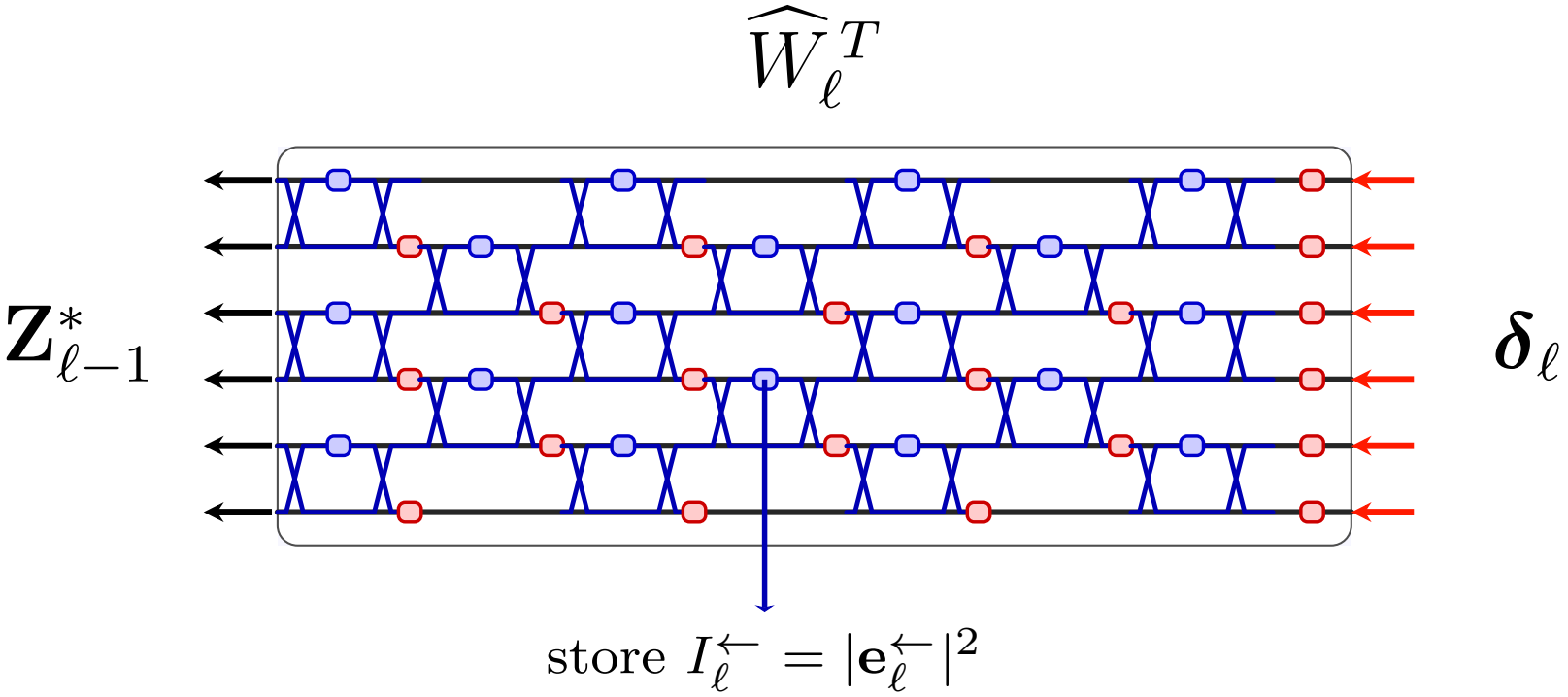

Analog backpropagation algorithm

4. Interference measurement

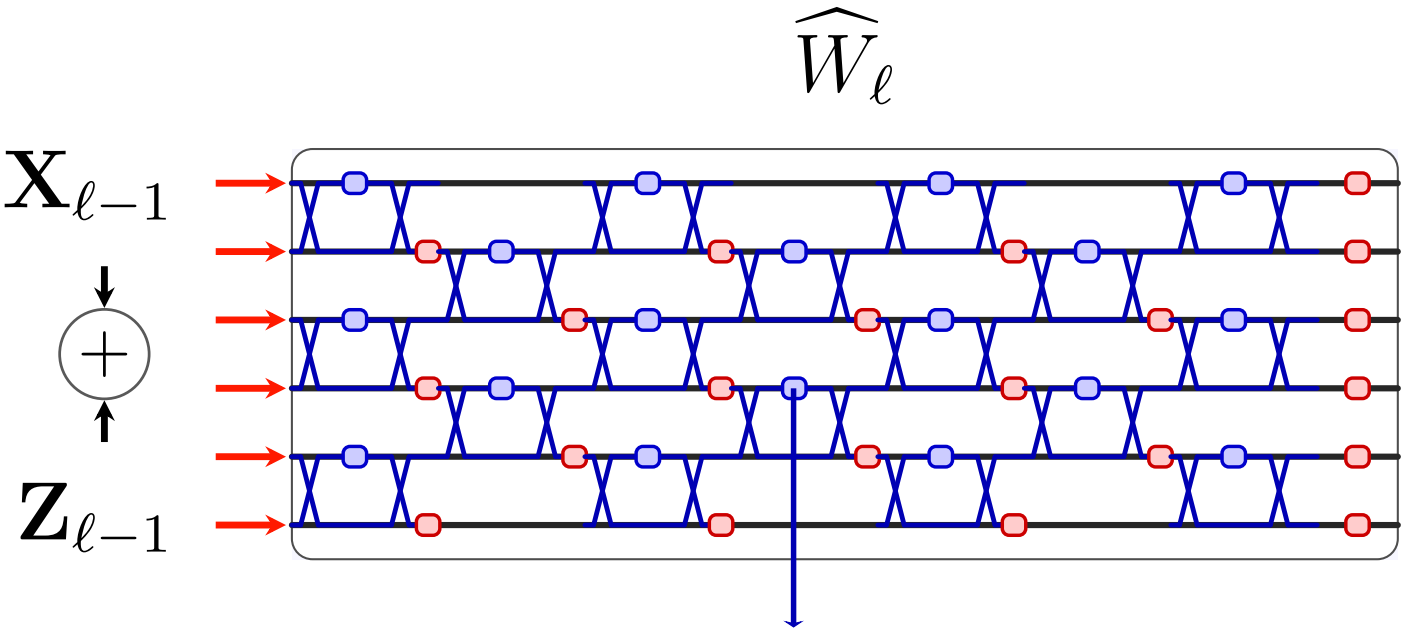

store $I_\ell = |\mathbf{e}_\ell^{\rightarrow} + [\mathbf{e}_\ell^{\leftarrow}]^*|^2$

Gradient retrieval

Compute the gradient from the three intensity measurements:

$$\frac{\partial \mathcal{L}}{\partial \varepsilon_\ell} = \frac{k_0^2}{2}(I_\ell - I_\ell^{\rightarrow} - I_\ell^{\leftarrow})$$

Adjoint source term

In the original work, the starting point was the mean-square loss:

$$\mathcal{L}_{\mathrm{MS}} = \frac{1}{2}\|\mathrm{X_L} - \mathrm{T}\|^2 = \frac{1}{2}(\mathrm{X_L} - \mathrm{T})^\dagger(\mathrm{X_L} - \mathrm{T}) \tag{1}$$

From this, it can be derived that the quantity triggering the analog backpropagation algorithm is:

$$\boldsymbol{\delta}_{\mathrm{L}} = \phi'_{\mathrm{L}}(\mathrm{Y_L})(\mathrm{X_L} - \mathrm{T})^*.$$

My contribution: adjoint source term generalization

Define output-layer adjoint source:

$$\boldsymbol{\delta}_{\mathrm{L}} := \phi'_{\mathrm{L}}(\mathrm{Y}_{\mathrm{L}}) \left(\frac{\partial \mathcal{L}_{\mathrm{DR}}}{\partial \mathrm{X}_{\mathrm{L}}} \right)^{*}$$

- This works for supervised and unsupervised losses

Key insight

Correct adjoint injection can be generated without targets

Poisson Deep Ritz derivative

Deep Ritz integrand at sample x_i:

$$g_i = \frac{1}{2}\left|\nabla u_\theta(x_i)\right|^2 - f(x_i)\, u_\theta(x_i)$$

Scalar residual:

$$\frac{\partial g_i}{\partial u_\theta(x_i)} = -f(x_i) - \Delta u_\theta(x_i)$$

With readout $u_\theta(x_i) = \mathrm{Re}\{a^\dagger X_L(x_i)\} + b$:

$$\frac{\partial \mathcal{L}_{DR}}{\partial X_L(x_i)} = w_i\left(-f(x_i) - \Delta u_\theta(x_i)\right)\frac{1}{2}\, a^*$$

Adjoint injection for Deep Ritz

For each sample x_i:

$$\boldsymbol{\delta}_L(x_i) = \phi'_L\big(Y_L(x_i)\big)\ \frac{w_i}{2}\big(-f(x_i) - \Delta u_\theta(x_i)\big)\, a$$

- Complex vector synthesized and injected from output ports
- Same mathematical structure of the original case

My contribution: Photonic Deep Ritz algorithm

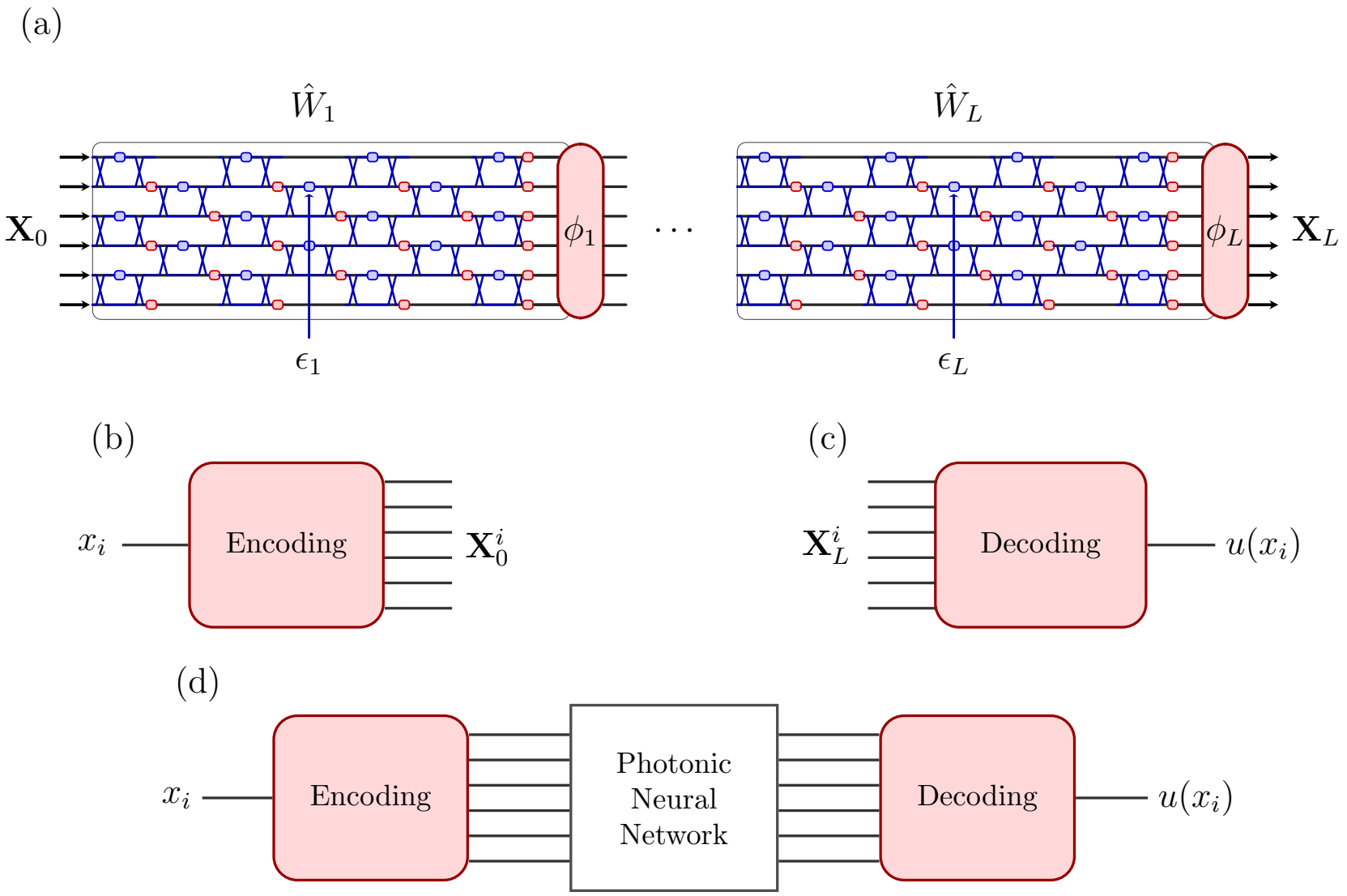

1. Sample a batch $\{x_i\}_{i=1}^{B}$ of size B from a user-defined spatial distribution
2. For each x_i: encode x_i according to the chosen input rule, measure $X_L(x_i)$ and compute $u_\theta(x_i)$.
3. Compute the required spatial derivatives (e.g. $\nabla u_\theta(x_i)$ and, when needed, $\Delta u_\theta(x_i)$) using an analytic approach.
4. Evaluate the loss as the average over the batch points (Monte Carlo estimate).
5. If a stopping criterion is met (maximum number of epochs or tolerance achieved), go to step 9; otherwise, continue.
6. Compute residuals r_i and construct the adjoint source term.
7. Synthesize and inject the adjoint fields corresponding to $\boldsymbol{\delta}_L$, measure overlaps $\langle e^{\rightarrow}, e^{\leftarrow}\rangle$ and recover $\partial\mathcal{L}/\partial\varepsilon$ for the physical parameters.
8. Update parameters using an optimizer (e.g. Adam) and repeat from step 1.
9. End.

Benchmark 1: Dirichlet BC

Problem: $-\mathrm{u}''(\mathrm{x}) = 1$ on $(0, 1)$, $\mathrm{u}(0) = \mathrm{u}(1) = 0$

Deep Ritz loss:

$$\mathcal{L}_{\mathrm{DR}} = \mathcal{L}_{\mathrm{int}} + \mathcal{L}_{\mathrm{bc,d}}$$

Training hyperparameters

epochs	batch size	step size	$\lambda_{\mathrm{bc,d}}$	N	depth
1000	64	0.02	50.0	3	2

Dirichlet BCs: results

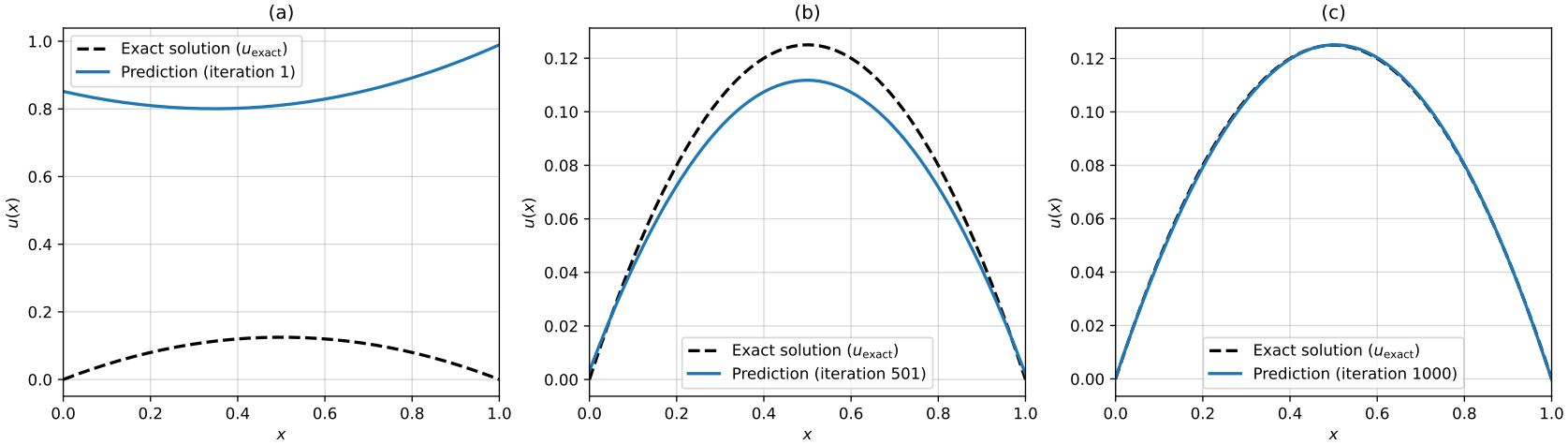

Figure: Predicted solution vs analytical reference.

Dirichlet BC: training diagnostics

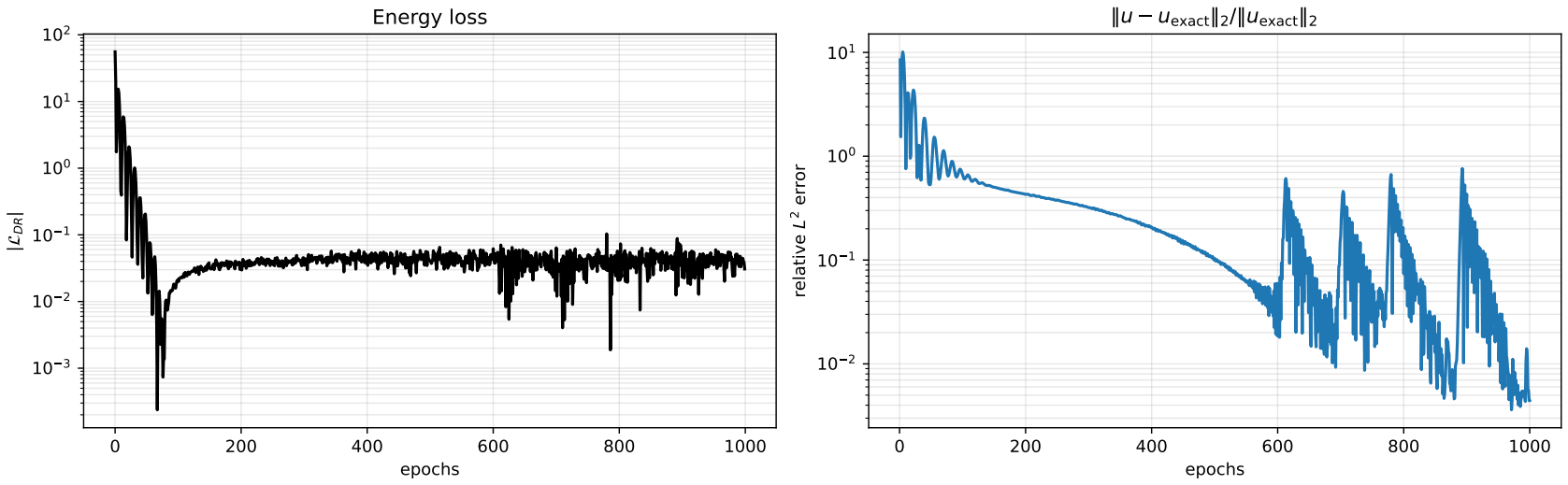

Figure: Deep Ritz loss and relative $\mathcal{L}^2$ error.

Energy loss interpretation

The exact solution satisfies

$$\mathcal{L}_{\mathrm{DR}}(\mathrm{u}_{\mathrm{exact}}) = -\frac{1}{24} \approx -0.0417.$$

In our experiments, we measured a final Deep Ritz loss of

$$\mathcal{L}_{\mathrm{DR}} = -0.0308.$$

- This value is consistent with the expected energy scale of the problem.
- A small discrepancy is mainly due to the presence of the Dirichlet boundary penalty.

Energy loss vs strong-form residual

- Deep Ritz minimizes a weak (energy-based) objective
- Small energy does not guarantee pointwise PDE accuracy
- Residual diagnostics are essential for accuracy assessment

Benchmark 2: Mixed BCs

Problem with Neumann condition:

$$-u''(x) = \sin(\pi x) \text{ on } (0,1), \quad u(0) = 0, \quad u'(1) = 0$$

Deep Ritz energy includes the Neumann boundary term:

$$\mathcal{L}_{\mathrm{DR}} = \underbrace{\mathcal{L}_{\mathrm{int}} + \mathcal{L}_{\mathrm{bc,n}}} + \mathcal{L}_{\mathrm{bc,d}}$$

Training hyperparameters

epochs	batch size	step size	$\lambda_{\mathrm{bc,d}}$	N	depth
7500	64	0.005	50.0	3	2 and 4

Mixed BCs: shallow model (depth = 2)

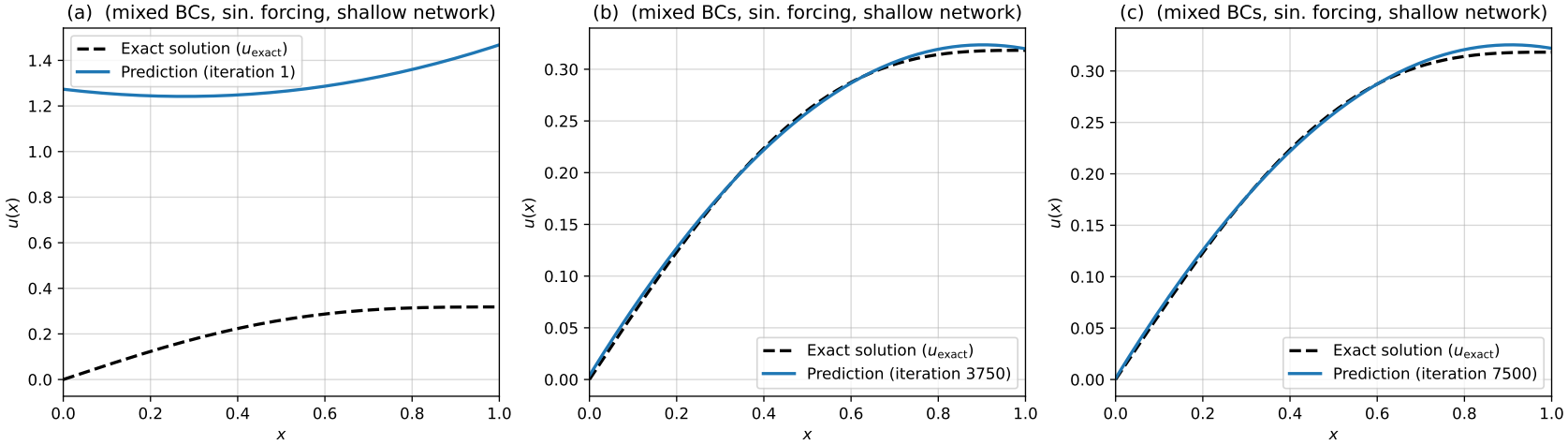

Figure: Shallow model: predicted solution vs exact.

Mixed BCs: shallow training loss

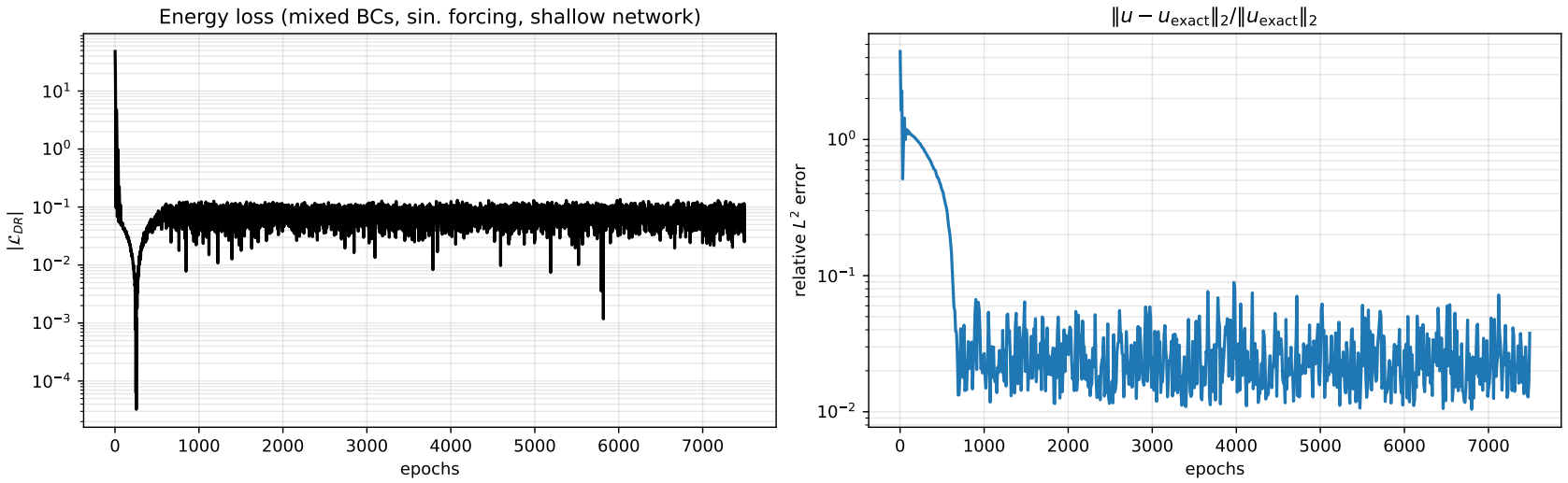

Figure: Deep Ritz training loss (shallow network).

Mixed BCs: deep model (depth = 4)

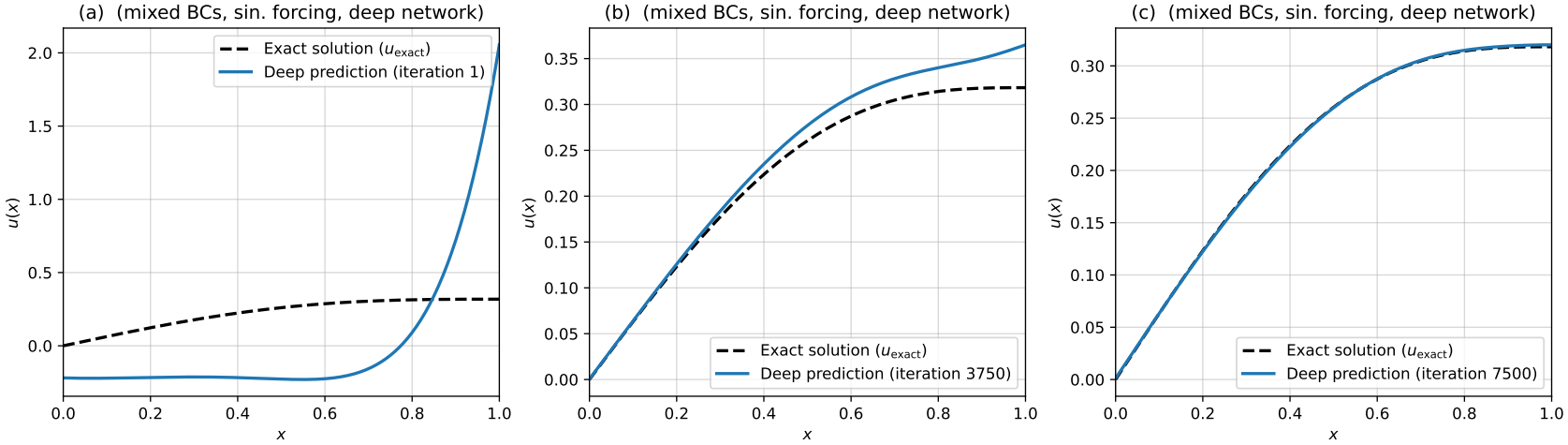

Figure: Deep model: predicted solution vs exact.

Depth comparison: training loss

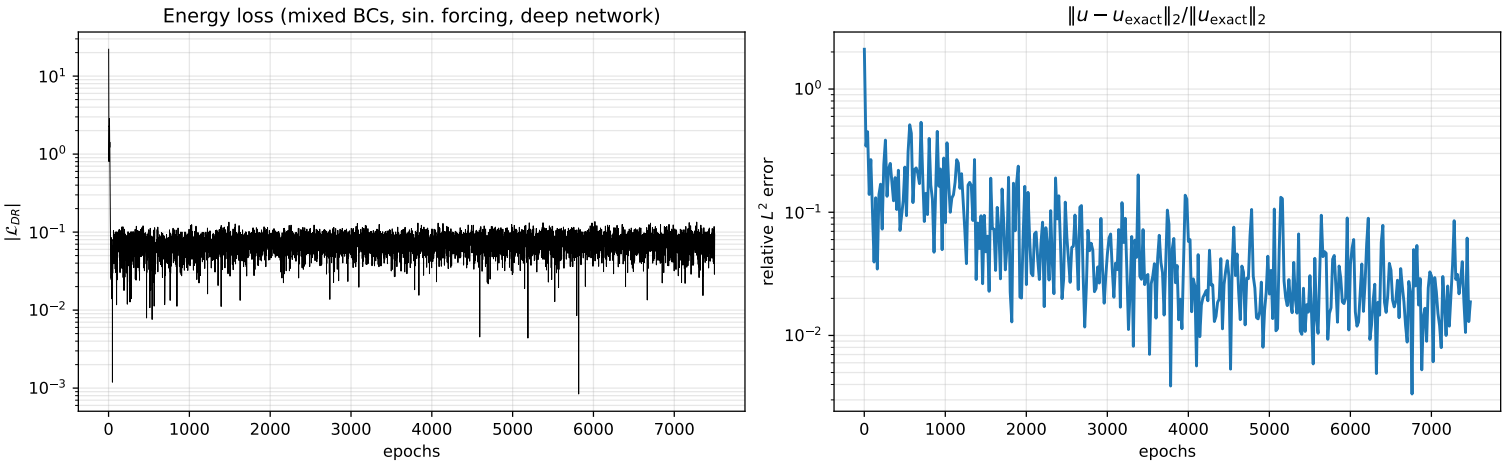

Figure: Deep Ritz loss (deep network).

Depth comparison

Effects of depth
All error values are reported in units of 10^{-2}

Model	$\lvert\mathcal{L}_{\mathrm{DR}}\rvert_{\mathrm{final}}$	$(\mathrm{rel.}\,\mathcal{L}^2)_{\mathrm{final}}$	$\lvert u_\theta(0)\rvert$	$\lvert u'_\theta(1) - g\rvert$	RMS(r) (interior)
shallow	8.710	3.775	0.125	7.396	29.05
deep	9.504	1.873	0.115	0.507	5.368

Limitations and contribution

Limitations:

- Deep Ritz requires energy formulation (elliptic problems)
- Non-convex training in network parameters

Contribution

Stable in situ photonic training loop for unsupervised physics loss using adjoint injection

Future work

- Beyond symmetric problems: non-symmetric operators
- More tasks: eigenvalue problems, broader formulations
- Complex-valued objectives beyond real-part readout
- Hardware implementations,introduction of losses