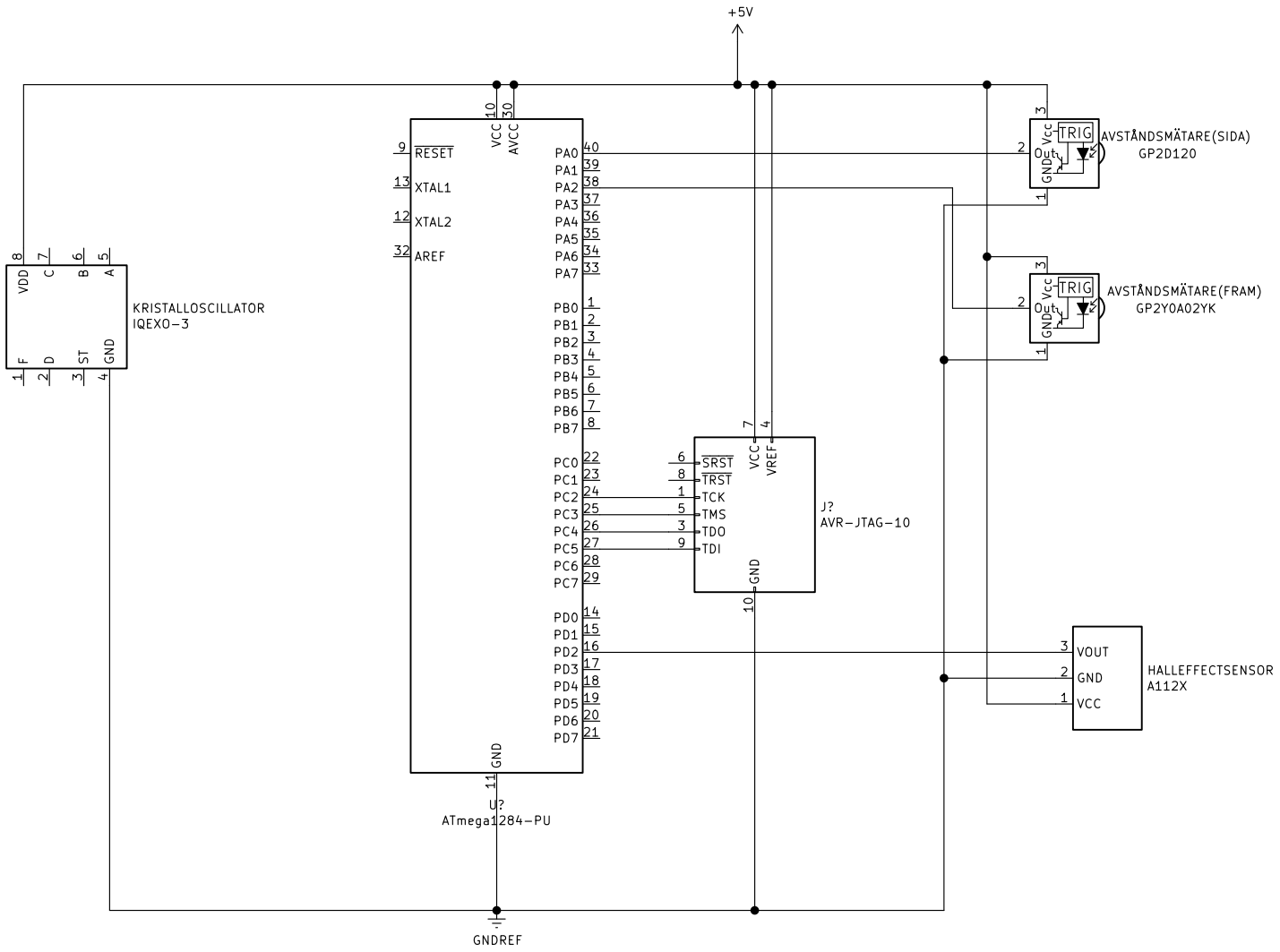

Sheet: /
File: sens.sch

Title: Sensormodul

Size: A4	Date: 2018-10-15	**Rev:**
KiCad E.D.A. kicad 5.0.1		Id: 1/1