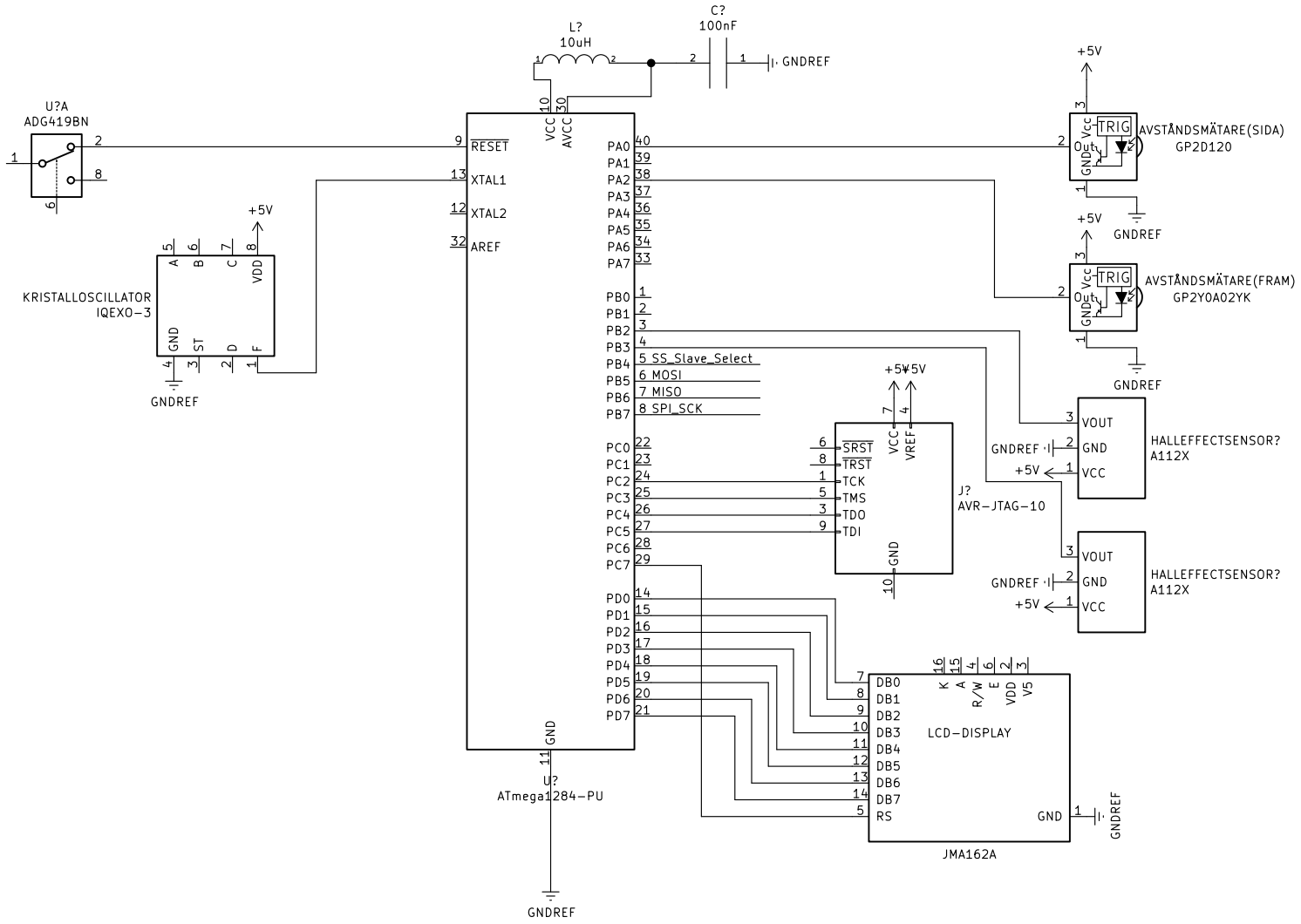

Sheet: /
File: sens.sch

Title: Sensormodul

Size: A4	Date: 2018-11-06	Rev:
KiCad E.D.A. kicad (5.0.0)		Id: 1/1