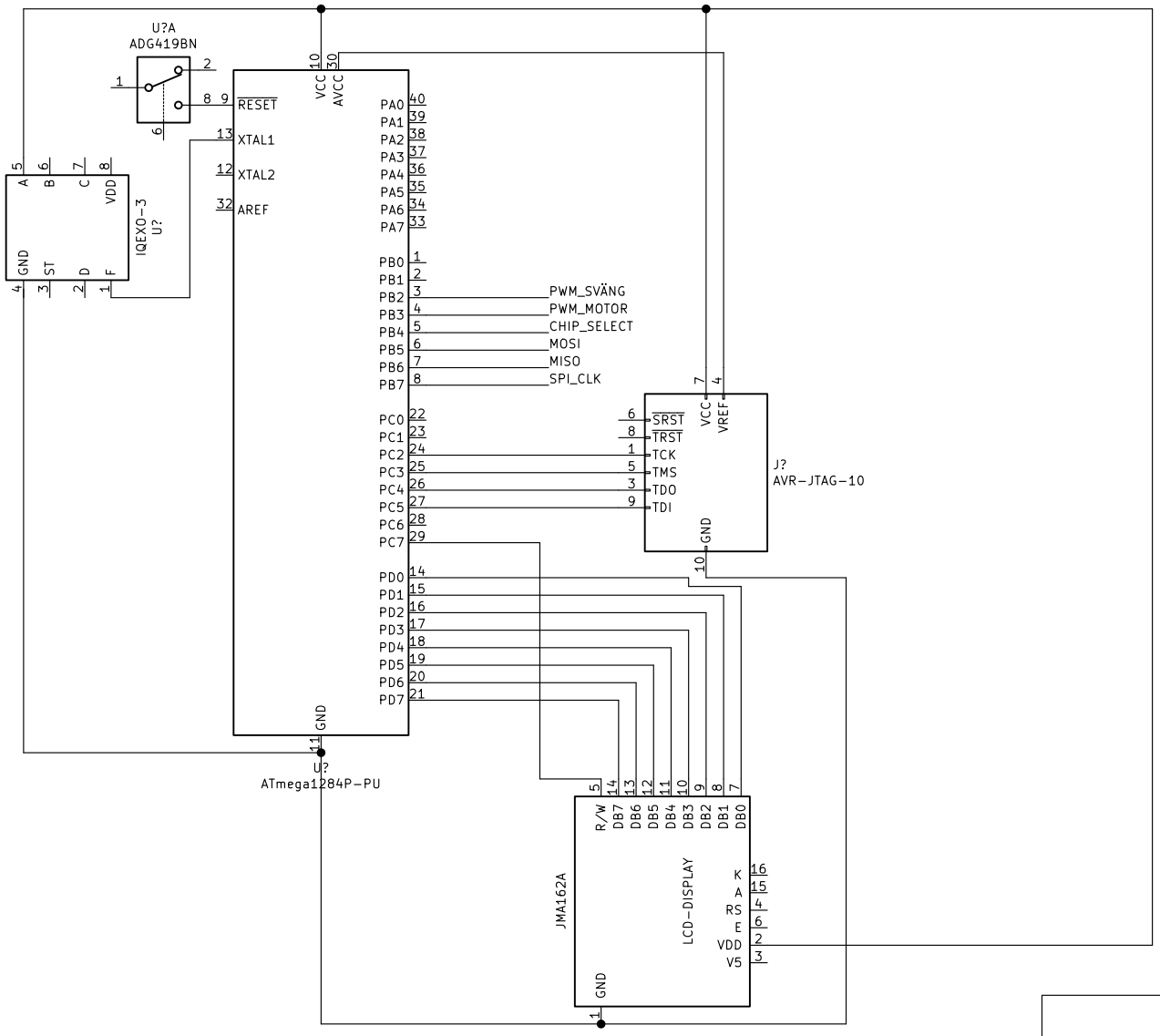

Sheet: /
File: styr.sch

Title: Styrmodul

Size: A4	Date: 2018-10-09	Rev:
KiCad E.D.A. kicad (5.0.0)		Id: 1/1