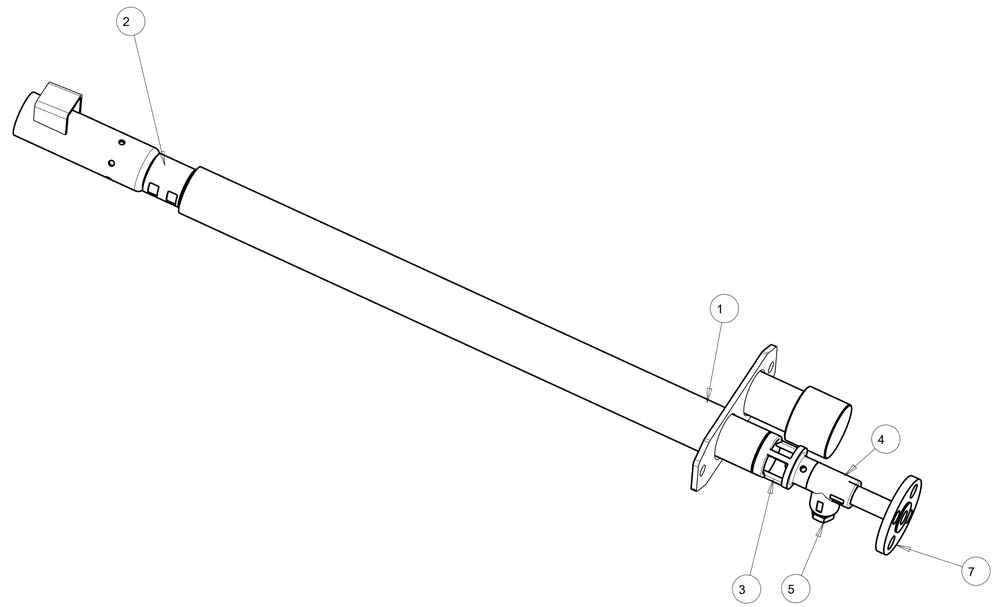

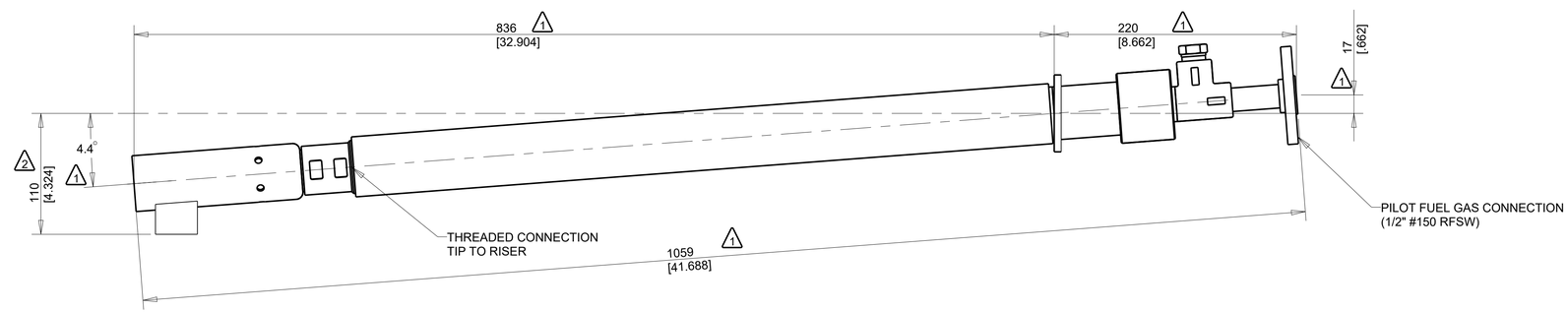

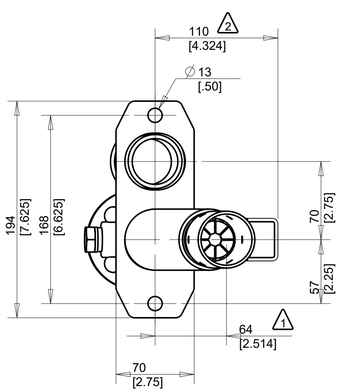

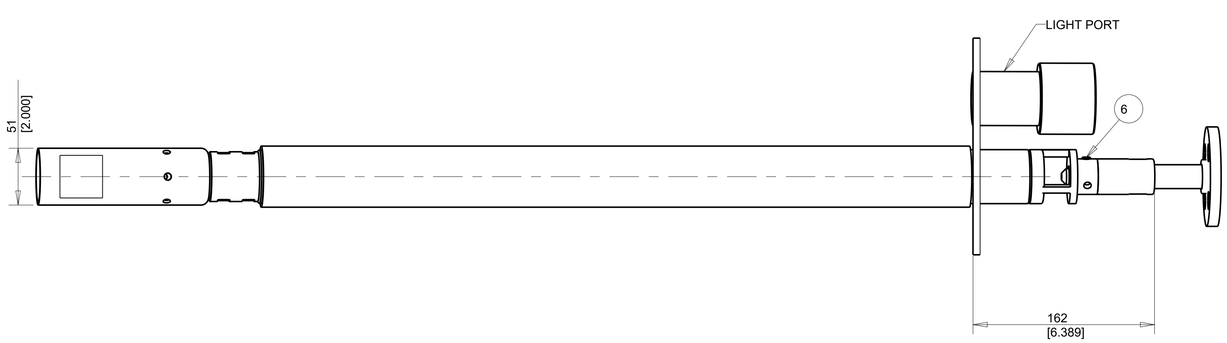

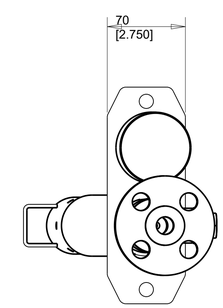

PARTS LIST

ITEM	QTY	DESCRIPTION	DWG NO	MATERIAL	PART NO.
1	1	PILOT GAS RISER ASSEMBLY	B-70206	304SS	1487727
2	1	STANDARD PILOT TIP WITH GUIDE	B-71506	CKS20/310SS	1494303
3	1	ST-2 PILOT VENTURI	ST12101	CF-8 (304SS)	1341157
4	1	ST-2 ORIFICE	ST12102	CF-8 (304SS)	1341158
5	1	PLUG-		304 SS	0008063
6	1	SET SCREW		302HQ(SS)	1353087
7	1	FLANGE ASSEMBLY	ST10353	304 SS	1373709

NOTES

1. ALL MATERIAL IS STAINLESS STEEL NO SURFACE PREP OR PAINT REQUIRED.
2. FOR ADDITIONAL ENGINEERING INFORMATION SEE JOHN ZINK DATA SHEET B-9209597-801 AND CAPACITY CURVE B-9209597-801-A.
3. PILOT WEIGHT = 7 kg [16 lbs]
4. DIMENSIONS SHOWN IN [ ] ARE INCHES.
5. NO PIPING LOAD ALLOWANCE ON PILOT.
6. REPLACEMENT PARTS WILL BE EQUIVALENT OR UPGRADE MATERIALS.
7. FOR ADDITIONAL QA/QC INFORMATION SEE PROJECT INSPECTION TEST PLAN.
8. FOR BURNER GA SEE DRAWINGS B-9209597-601
9. USE ANTI-SEIZE ON ALL STAINLESS STEEL THREADED CONNECTIONS.

GENERAL TOLERANCES LEGEND (UNLESS NOTED OTHERWISE)

SHEET METAL (FLAT): ±.01563" / 0.4mm	TILE: ±.125" / 3mm
SHEET METAL (FORMED): ±.0625" / 1.6mm / ±1°	SAW: ±.0625" / 1.6mm
MACHINING: ±.01563" / 0.4mm	ASSEMBLY: ±.125" / 3mm
PIPING CONNECTIONS: ±.25" / 6mm / ±1°	

NO.	REVISION DESCRIPTION	DR.	APP.	DATE
REV 3				
REV 2	ADD A PILOT TIP GUIDE	TDF	JTB	12-19
REV 1	LENGTHEN DUE TO CHANGED PLENUM	TDF	JTB	8-19

THIS DRAWING AND THE INFORMATION CONTAINED HEREIN IS PROPRIETARY AND CONFIDENTITAL INFORMATION OF JOHN ZINK COMPANY, LLC OR ITS RESPECTIVE AFFILIATES, AND SHALL NOT BE COPIED, TRACED, PHOTOGRAPHED, REPRODUCED IN ANY MANNER, OR USED FOR ANY PURPOSE WHATSOEVER, EXCEPT: (1) FOR THE LIMITED PURPOSE OF INSTALLATION, OPERATION OR MAINTENANCE OF THE EQUIPMENT REFERENCED HEREIN, OR (2) BY WRITTEN PERMISSION OF JOHN ZINK COMPANY, LLC OR ITS RESPECTIVE AFFILIATES. JOHN ZINK COMPANY, LLC OR IT RESPECTIVE AFFILIATES RETAIN ALL INTELLECTUAL PROPERTY RIGHTS, WHETHER REGISTERED OR UN-REGISTERED, INCLUDING TRADEMARKS, PATENTS AND COPYRIGHTS, EMBODIED IN THIS DRAWING AND THE INFORMATION CONTAINED HEREIN. THIS DRAWING SHALL BE RETURNED TO JOHN ZINK COMPANY, LLC UPON REQUEST. COPYRIGHT 2019, JOHN ZINK COMPANY, LLC OR ITS RESPECTIVE AFFILIATES, COLLECTIVELY DOING BUSINESS AS JOHN ZINK HAMWORTHY COMBUSTION.

FOR A LIST OF RELEVANT PATENTS AND TRADEMARKS, PLEASE SEE JOHNZINK.COM/LEGAL-NOTICES

FOR PARTS AND SERVICE: WWW.JOHNZINKHAMWORTHY.COM

FINAL
ISSUED
Jan. 10, 2020
JOHN ZINK AP
TOKYO, JAPAN

FOR: KOREA PETROCHEMICAL IND CO	JOHN ZINK HAMWORTHY COMBUSTION		
USER: KOREA PETROCHEMICAL IND CO			
JOBSITE: ONSAN, KOREA	ST-S MANUAL PILOT ASSEMBLY		
JZ PROJECT. NO.: 9209597			
P.O. NO.: KMP190704-01	(126 - REQUIRED)		
DR: TDF **DATE:** 7-19	SCALE: NONE	**DRAWING NUMBER:** B-9209597-606	**REV.** 2
CK: MBN **DATE:** 7-19	THIRD ANGLE:	SHEET 1 OF 1	
APP.: JTB **DATE:** 7-19			

PART NUMBER
1487723