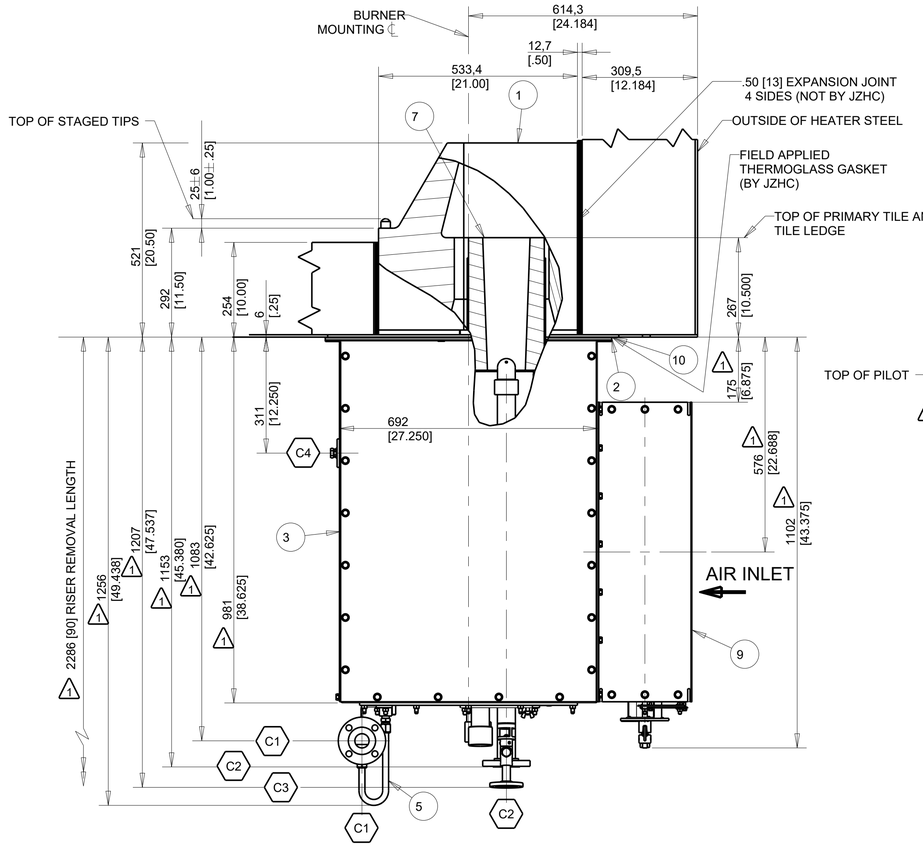

ELEVATION VIEW
SECTION A-A

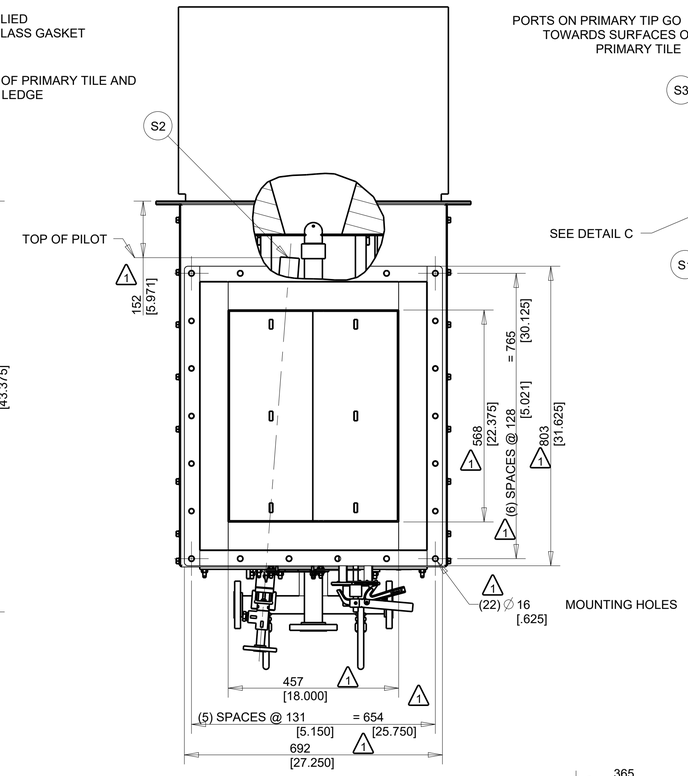

AIR INLET DETAILS

******CAUTION******

GAS TIP ORIENTATION IS CRITICAL FOR PROPER AND SAFE BURNER OPERATION. REFER TO TILE VIEW FOR CORRECT GAS TIP ORIENTATION.

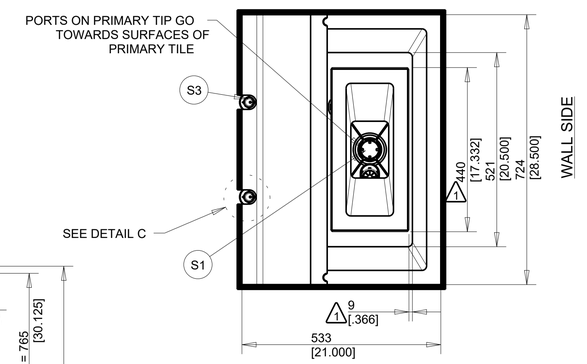

TILE VIEW

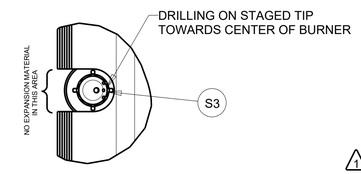

DETAIL C
SCALE 0.375

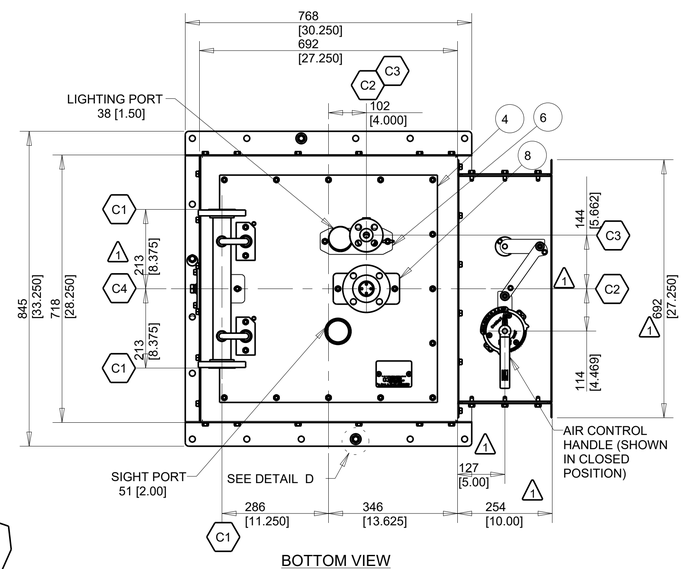

BOTTOM VIEW

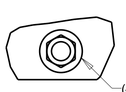

DETAIL D

(4) ∅ 29 [1.125] OVERSIZED HOLES FOR MTG OF TILE PLATE

FINAL

ISSUED

Aug 22, 2019

JOHN ZINK AP
TOKYO, JAPAN

J.Z. S.O. 9209597 MO/YR
END USER KOREA PETROCHEMICAL IND CO
P.O. KMP190704-01
BURNER MODEL: DRAGONSTAR IV
BURNER TAG: B-601-1
HEATER TAG: N-BA102-108

For list of relevant patents & trademarks please see JOHNZINK.COM/LEGAL-NOTICES

JOHN ZINK HAMWORTHY COMBUSTION.

For Parts & Service •813.4332.5550
WWW.JOHNZINKHAMWORTHY.COM

BURNER TAG INFORMATION
STAINLESS STEEL TAG ATTACHED WITH STAINLESS STEEL FASTENERS

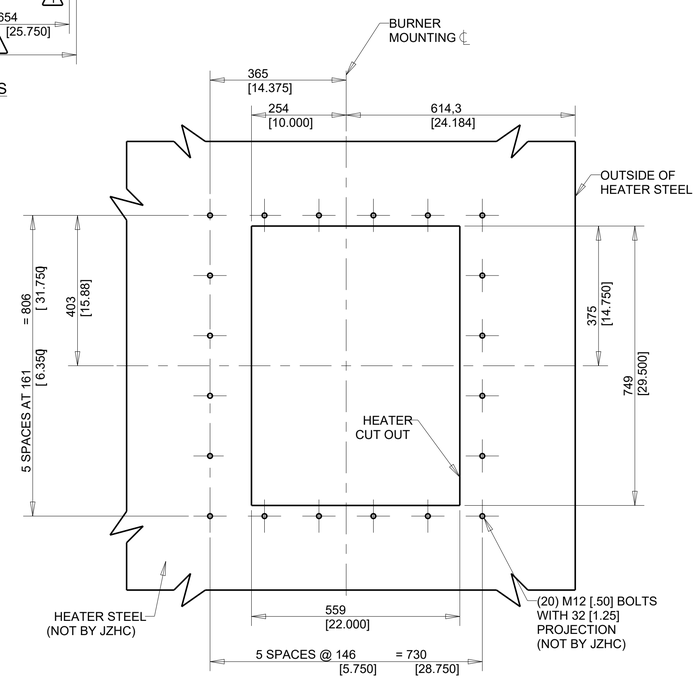

MOUNTING DETAIL

PARTS LIST

ITEM	QTY	DESCRIPTION	DWG NO	MATERIAL	PART NO.
1	1	DRAGONSTAR TILE ASSEMBLY	B-70101	TB-6BX	1487718
2	1	TILE MOUNTING ASSEMBLY	B-71401	304SS	1487719
3	1	PLENUM ASS'Y	B-70301	304SS	1487720
4	1	FRONT PLATE ASSEMBLY	B-70601	304SS	1487721
5	1	STAGED MANIFOLD	B-70901	304SS	1487722
6	1	ST-2 PILOT ASSEMBLY	B-606	304SS/CK20	1487723
7	1	PRIMARY TILE ASSEMBLY	B-70201	TB-6BX/304SS	1487724
8	1	PRIMARY RISER ASSEMBLY	B-70801	CK20/310SS/304SS	1487725
9	1	DAMPER ASSEMBLY	B-70701	304SS	1489041
10	1	TAPE, GLASS .125 X 2			1070578
S1	1	PRIMARY GAS TIP ASSEMBLY	B-71501	CK20/310SS	1487737
S2	1	ST-2 GAS TIP	ST12107	CK-20	1341166
S3	2	STAGED GAS TIP	ST12066	CK-20	1316246

NOZZLE LEGEND

C1	2	STAGED FUEL GAS CONNECTION: 1 1/2" 150# RFSW (1 END TO BE CLOSED)
C2	1	PRIMARY FUEL GAS CONNECTION: 1 1/2" 150# RFSW
C3	1	PILOT GAS CONNECTION: 1/2" 150# RFSW
C4	1	PRESSURE TAP CONNECTION: 1/2" FNPT (PLUGGED)

NOTES

1. ALL EXTERNAL SURFACES ARE STAINLESS STEEL. NO PAINTING IS REQUIRED.
2. BURNER TILE MATERIAL TO BE 1650° C [3000° F] SERVICE TEMPERATURE.
3. FOR ADDITIONAL ENGINEERING INFORMATION SEE JOHN ZINK DATA SHEET B-9209597-801 AND CAPACITY CURVE B-9209597-801-A.
4. SHIP LOOSE ITEMS TAG:
   BURNER ASSEMBLY B-601-1
   BURNER TILE B-70101-1
   PRIMARY BURNER TILE B-70201-1
5. BURNER TILE SET WEIGHT = 242 kg [534 lbs]
   BURNER ASSEMBLY WEIGHT = 285 kg [627 lbs]
   TOTAL WEIGHT = 527 kg [1161 lbs]
6. DIMENSIONS SHOWN IN [ ] ARE INCHES.
7. NO PIPING LOAD ALLOWANCE ON FUEL CONNECTIONS.
8. "S" NUMBERS ARE RECOMMENDED REPLACEMENT PARTS.
9. REPLACEMENT PARTS WILL BE EQUIVALENT OR UPGRADE MATERIALS.
10. DO NOT PAINT STAINLESS STEEL COMPONENTS.
11. FOR ADDITIONAL QA/QC INFORMATION SEE PROJECT INSPECTION TEST PLAN.
14. REPLACES BURNER SUPPLIED ON JOHN ZINK S.O. S75926, DWG. NO.602/603

GENERAL TOLERANCES LEGEND (UNLESS NOTED OTHERWISE)

SHEET METAL (FLAT): ±.01563" / 0.4mm	TILE: ±.125" / 3mm
SHEET METAL (FORMED): ±.0625" / 1.6mm / ±1°	SAW: ±.0625" / 1.6mm
MACHINING: ±.01563" / 0.4mm	ASSEMBLY: ±.125" / 3mm
PIPING CONNECTIONS: ±.25" / 6mm / ±1°	

NO.	REVISION DESCRIPTION	DR.	APP.	DATE
REV 3				
REV 2				
REV 1	CHANGE PLENUM/DAMPER PER CUSTOMER COMMENTS	TDF	JTB	8-19

THIS DRAWING AND THE INFORMATION CONTAINED HEREIN IS PROPRIETARY AND CONFIDENTITAL INFORMATION OF JOHN ZINK COMPANY, LLC OR ITS RESPECTIVE AFFILIATES, AND SHALL NOT BE COPIED, TRACED, PHOTOGRAPHED, REPRODUCED IN ANY MANNER, OR USED FOR ANY PURPOSE WHATSOEVER, EXCEPT: (1) FOR THE LIMITED PURPOSE OF INSTALLATION, OPERATION OR MAINTENANCE OF THE EQUIPMENT REFERENCED HEREIN, OR (2) BY WRITTEN PERMISSION OF JOHN ZINK COMPANY, LLC OR ITS RESPECTIVE AFFILIATES. JOHN ZINK COMPANY, LLC OR IT RESPECTIVE AFFILIATES RETAIN ALL INTELLECTUAL PROPERTY RIGHTS, WHETHER REGISTERED OR UN-REGISTERED, INCLUDING TRADEMARKS, PATENTS AND COPYRIGHTS, EMBODIED IN THIS DRAWING AND THE INFORMATION CONTAINED HEREIN. THIS DRAWING SHALL BE RETURNED TO JOHN ZINK COMPANY, LLC UPON REQUEST. COPYRIGHT 2019, JOHN ZINK COMPANY, LLC OR ITS RESPECTIVE AFFILIATES, COLLECTIVELY DOING BUSINESS AS JOHN ZINK HAMWORTHY COMBUSTION.

FOR A LIST OF RELEVANT PATENTS AND TRADEMARKS, PLEASE SEE JOHNZINK.COM/LEGAL-NOTICES

FOR PARTS AND SERVICE: WWW.JOHNZINKHAMWORTHY.COM

FOR: KOREA PETROCHEMICAL IND CO		JOHN ZINK HAMWORTHY COMBUSTION	
USER: KOREA PETROCHEMICAL IND CO			
JOBSITE: ONSAN, KOREA		DRAGONSTAR IV BURNER ASSEMBLY	
JZ PROJECT. NO.: 9209597		FOR HEATERS N-BA102-108	
P.O. NO.: KMP190704-01		(128 (18/HEATER = 126 + 2 SPARE) - REQUIRED)	
DR: TDF	DATE: 7-19	SCALE: NONE	DRAWING NUMBER: B-9209597-601 SHEET 1 OF 1
CK: MBN	DATE: 7-19	THIRD ANGLE:	REV. 1
APP.: JTB	DATE: 7-19		

PART NUMBER 1487717