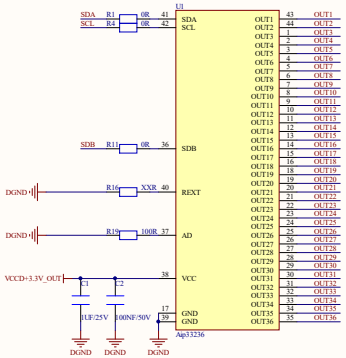

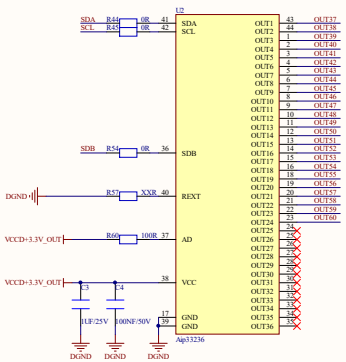

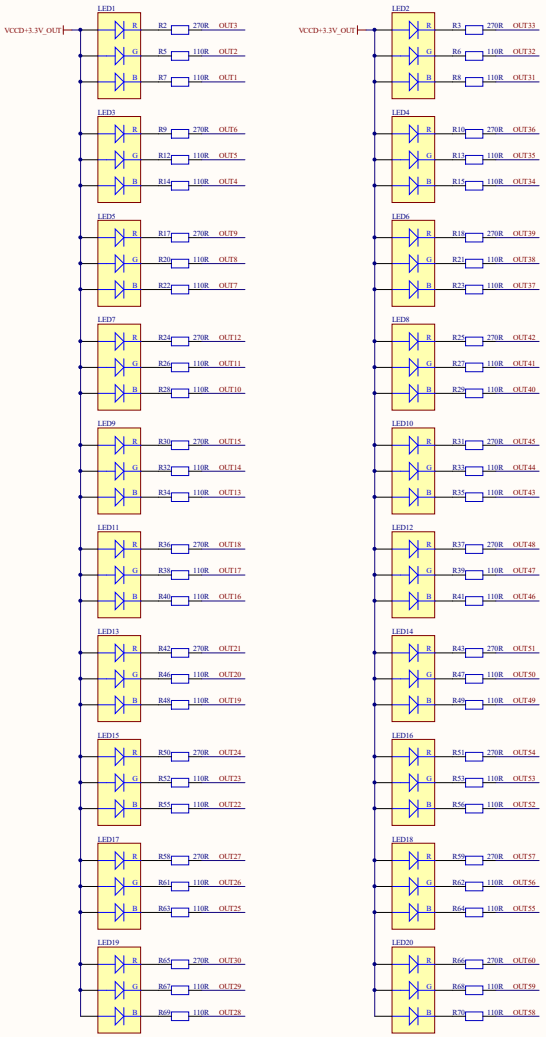

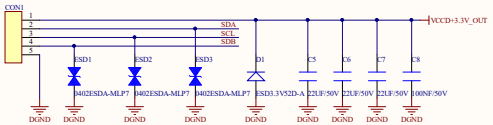

Title			
Size A2	Number		Revision
Date: 2025/9/9		Sheet of	
File: G5	-	Drawn By: RGB	-

SchDoc