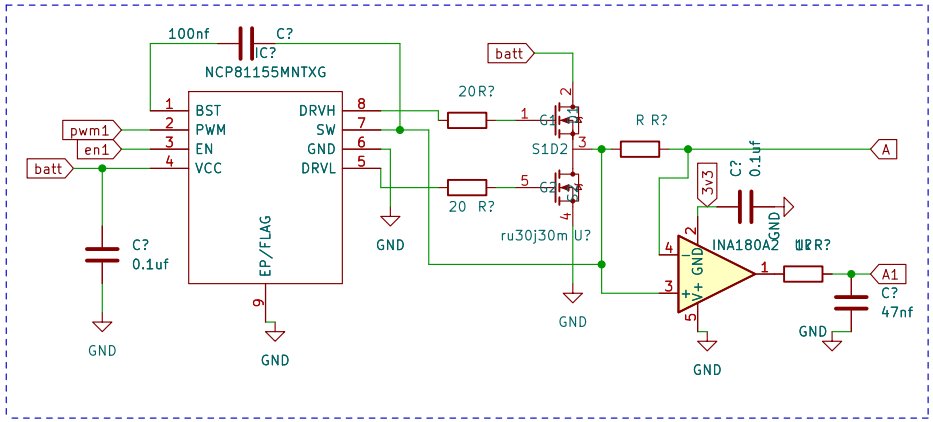

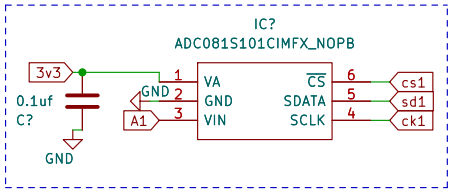

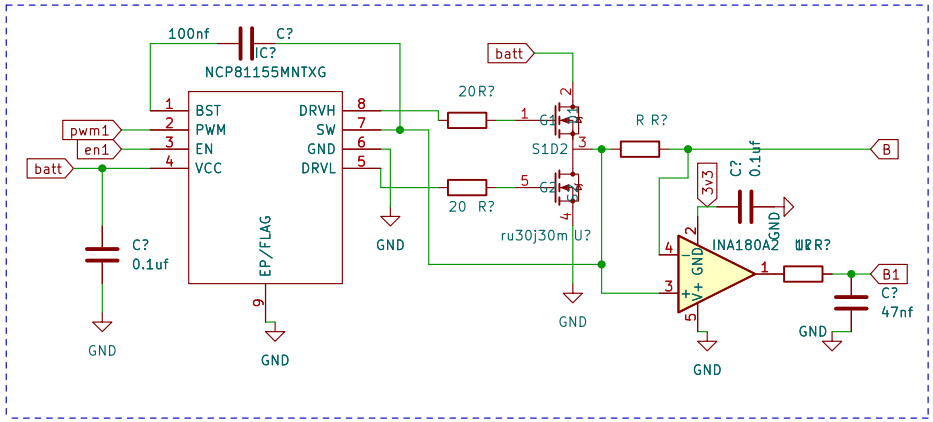

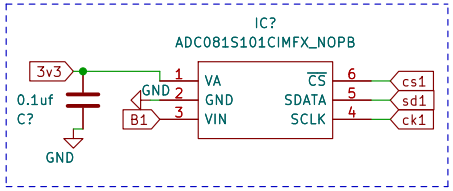

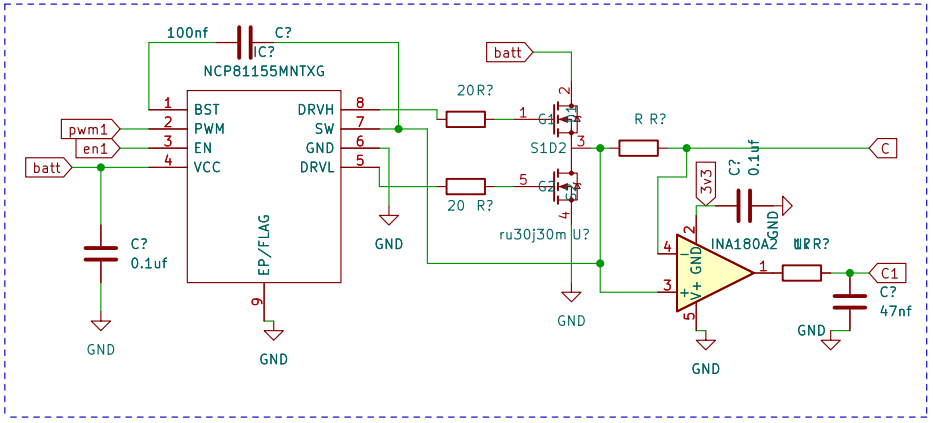

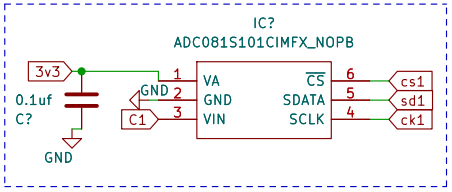

GAFSAOUI Y

Sheet: /driver-crntSens/

File: drv.kicad_sch

Title: FOC module for FPGA

Size: A4	Date: 2022-11-25	**Rev: v1**
KiCad E.D.A. kicad (6.0.9)		Id: 3/4