ICTC 2025

TFSNet: EEG-based Emotion Recognition using Temporal and Frequency-Spatial Feature

Yeryeong Lee[1] and Hyeryung Jang[2], Dongguk University

1 Division of AI Convergence, Dongguk University
2 Department of Computer Science and Artificial Intelligence, Dongguk University

Introduction

Background

- **Automatic Emotion Recognition** is used in emotion monitoring[1, 2], smart healthcare[1], user-centered services[2], among other applications.
- **EEG** is real-time central nervous system Electrical Activity, **non-invasive** and provides **high temporal resolution**[1].
- Existing studies often utilize medical-grade datasets collected with **expensive equipment** and primarily used **single-domain representations**.

Proposal

- **DREAMER**[3] dataset, providing results comparable to those collected under controlled laboratory conditions.
- **TFSNet**, a **multi-domain framework** that integrates **temporal**, **frequency**, and **spatial features** for EEG-based AER.

Dataset

Device

- **DREAMER**[3] was recorded using an **affordable, off-the-shelf device** that provides results comparable to those from expensive medical equipment.

Characteristics

- Recordings from **23 participants** who viewed **18 audiovisual stimuli** were captured at **128 Hz** from **14 EEG channels** arranged according to the international 10-20 system (see Fig. 1).

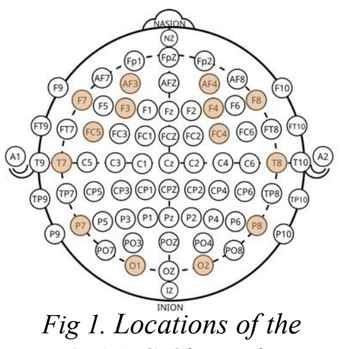

Fig 1. Locations of the 14 EEG Channels.

Labels

- Self-reported 5-point ratings on **Valence**, **Arousal**, and **Dominance** are used as binary labels for classification.

Method Overview: TFSNet

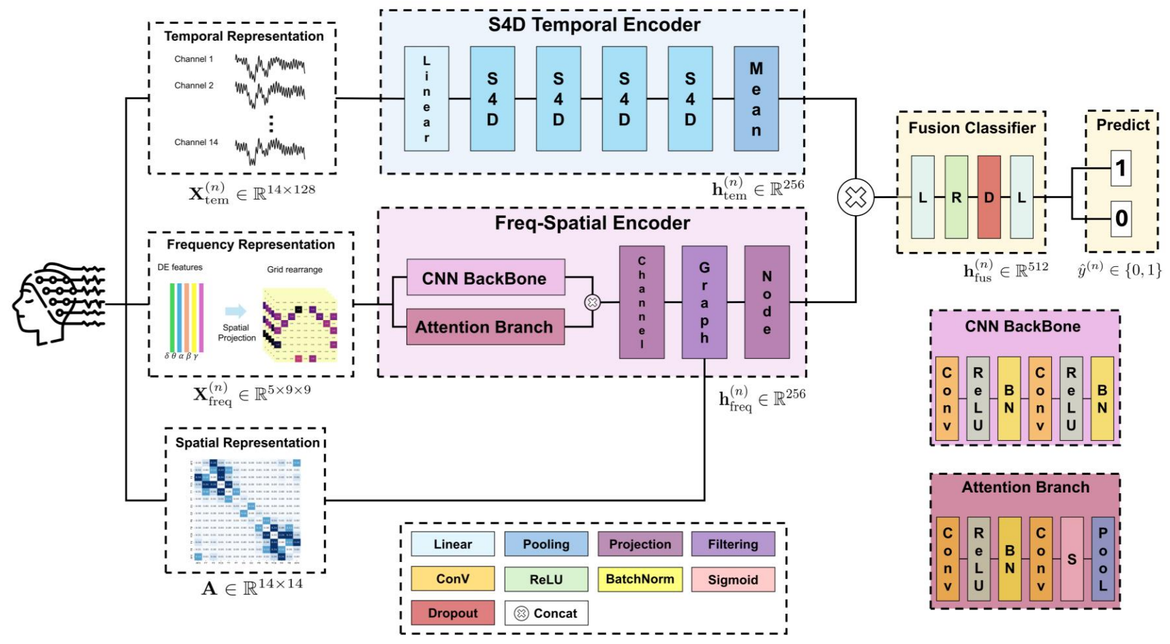

Fig 2. Architecture of the TFSNet.

Domain-specific Encoders

For learning temporal and frequency-spatial features from EEG signals.

1) **S4D Temporal Encoder:** $\mathbf{X}_{\text{tem}}^{(n)} \in \mathbb{R}^{C\times L} \rightarrow \mathbf{h}_{\text{tem}}^{(n)}$
   - $\mathbf{X}_{\text{tem}}^{(n)}$ is processed using an **SSM-based S4D architecture**[4] and aggregated using average pooling to obtain a final embedding.
   - Models the temporal patterns in EEG that reflect changing emotional states.

2) **Frequency-Spatial Encoder:** $\mathbf{X}_{\text{freq}}^{(n)} \in \mathbb{R}^{5\times9\times9} \rightarrow \mathbf{h}_{\text{freq}}^{(n)}$
   - A **CNN backbone** and an **attention module** extract features from $\mathbf{X}_{\text{freq}}^{(n)}$ to jointly model the locations and frequency patterns of EEG signals.
   - **Graph filtering**[5] with a normalized adjacency matrix $\hat{\mathbf{A}}$ obtains filtered node features $\mathbf{H}$, which are used to generate the final embedding.
     $\hat{\mathbf{A}} = \mathbf{D}^{-\frac{1}{2}}\mathbf{A}\mathbf{D}^{-\frac{1}{2}}, \quad \mathbf{H} = \hat{\mathbf{A}} \cdot \mathbf{X}$
   - Captures a distributed characteristic among brain regions by reflecting a physiological aspect often overlooked.

3) **Fusion Classifier:** $\mathbf{h}_{\text{fus}}^{(n)} = \left[\mathbf{h}_{\text{tem}}^{(n)}; \mathbf{h}_{\text{freq}}^{(n)}\right]$
   - Fused embeddings are passed to a binary classifier for emotion prediction.
   - This parallel structure leverages **complementary information** and **preserves distinct features**, leading to robust emotion recognition.

Data Preprocessing & Representation Extraction

14-channel *(C)* EEG signals segmented into 128-point *(L)* windows: $\mathbf{X}^{(n)} = [\mathbf{X}_1^{(n)}, \mathbf{X}_2^{(n)}, \ldots, \mathbf{X}_C^{(n)}]^\top \in \mathbb{R}^{C\times L}$

1) **Temporal representation:** $\bar{x}_i(t) = \frac{x_i(t)-\mu_i}{\sigma_i+\epsilon}, \quad \mathbf{X}_{\text{tem}}^{(n)} = \left[\bar{\mathbf{X}}_1^{(n)}(t), \bar{\mathbf{X}}_2^{(n)}(t), \ldots, \bar{\mathbf{X}}_C^{(n)}(t)\right]^\top$
   - **Channel-wise Z-score normalization** is applied to the segmented EEG signals for enhanced stability, which yields the temporal representation.

2) **Frequency representation:** $\mathbf{X}_{\text{freq}}^{(n)} = [\mathbf{G}^{(\delta)}, \mathbf{G}^{(\theta)}, \mathbf{G}^{(\alpha)}, \mathbf{G}^{(\beta)}, \mathbf{G}^{(\gamma)}]^\top \in \mathbb{R}^{5\times9\times9}$
   - Differential Entropy (DE) is computed across **5 standard EEG bands** (δ, θ, α, β, γ) to form a 3D frequency tensor.

3) **Spatial representation:** $A_{ij} = \begin{cases} \exp(-d_{ij}), & \text{if } i \neq j \\ 0 & \text{otherwise} \end{cases}, \quad \hat{\mathbf{A}} \in \mathbb{R}^{14\times14}$
   - Adjacency matrix $\hat{\mathbf{A}}$ constructed from **physical coordinates**, connection st rength is determined by **exponential distance-based weighting**.

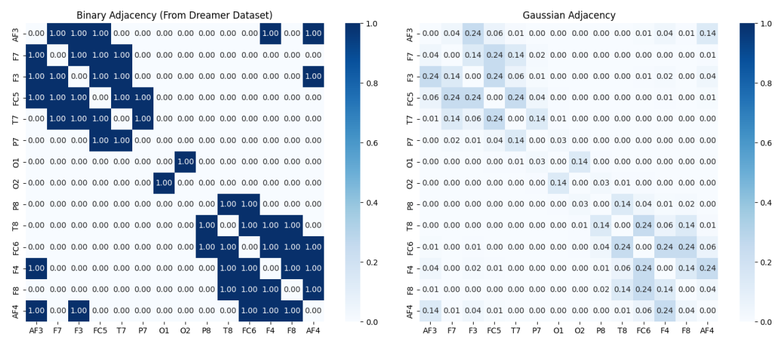

Fig 3. Binary adjacency matrix provided by the dataset (left), Gaussian adjacency matrix distance-based weighting used in spatial representation (right).

4) **Label assignment:** $(\mathbf{X}_{\text{tem}}^{(n)}, \mathbf{X}_{\text{freq}}^{(n)}) \rightarrow y^{(n)} \in \{0, 1\}$
   - Self-reported ratings are binarized for emotion classification: **below 3 becomes label 0**, **above 3 is label 1**.

Training Configuration

For three binary emotion classifications: **Valence**, **Arousal**, and **Dominance**.

- **Key Components**: The latent embedding size is $d_{\text{model}} = 256$, and adjacency matrix $\hat{\mathbf{A}}$ can be either **fixed or learnable**.
- **Loss Function**: Binary Cross-Entropy (BCE)
- **Training Settings**: AdamW optimizer with a learning rate/weight decay of 1×10^{-4}, a batch size of 64, and 50 epochs.
- **Validation**: Subject-dependent 10-fold cross-validation.

Experiments Result

- **Ablation Study**

Model Variant	Valence	Arousal	Dominance
S4D Temporal encoder	86.30	87.88	86.84
Freq-Spatial encoder (fixed **A**)	98.57	98.11	98.28
Freq-Spatial encoder (learnable **A**)	98.56	98.10	98.30
TFSNet (fixed **A**)	**98.61**	98.14	98.32
TFSNet (learnable **A**)	98.59	**98.17**	**98.34**

Table 1. Integration of dual encoders achieves SOTA performance.

- **Performance Comparison**

Metric	Fixed **A**			Learnable **A**		
	Valence	Arousal	Dominance	Valence	Arousal	Dominance
Accuracy	**98.61 ± 1.32**	98.14 ± 1.87	98.32 ± 1.74	98.59 ± 1.35	**98.17 ± 1.84**	**98.34 ± 1.69**
Precision	**98.48 ± 1.98**	97.96 ± 2.74	98.12 ± 2.36	98.45 ± 2.00	**97.97 ± 2.74**	**98.15 ± 2.28**
Recall	**98.10 ± 2.38**	97.85 ± 2.70	98.68 ± 1.58	98.06 ± 2.48	**97.92 ± 2.64**	**98.71 ± 1.62**
Specificity	**98.92 ± 1.43**	98.08 ± 2.41	97.59 ± 3.35	98.90 ± 1.46	**98.11 ± 2.33**	**97.60 ± 3.12**
F1-Score	**98.27 ± 1.72**	97.88 ± 2.20	98.38 ± 1.56	98.23 ± 1.77	**97.92 ± 2.18**	**98.41 ± 1.53**

Table 2. Compare learnable A vs Fixed A across all metrics.

- **Comparison with Baselines**

Model	Representations			Accuracy		
	Time	Freq.	Spatial	Valence	Arousal	Dominance
SVM	✓			62.49	62.17	61.84
FLDNET	✓			89.91	87.67	90.28
3DFR		✓		93.15	91.30	92.04
LEDPatNet19		✓		94.44	94.58	92.86
MTCA-CapsNet	✓			95.54	94.96	95.52
ECNN-C	✓			97.03	96.89	97.04
TFSNet (fixed A)	✓	✓	✓	**98.61**	98.14	98.32
TFSNet (learnable A)	✓	✓	✓	98.59	**98.17**	**98.34**

Table 3. TFSNet achieves SOTA performance, surpassing all baseline models due to its comprehensive integration of temporal, frequency, and spatial features.

Conclusion

- **Framework**: TFSNet is a **dual-encoder model** that **integrates temporal**, **frequency**, and **spatial information** for EEG-based emotion recognition.
- **Effect**: The model demonstrated **superior performance** over existing methods, validating the benefit of **combining multi-domain features**.
- **Future Work**: Future work includes extending the framework to subject-independent settings and exploring its generalization across larger datasets.

References

[1] Y. Wang, B. Zhang, and L. Di, "Research Progress of EEG-Based Emotion Recognition: A Survey," *ACM Computing Surveys*, vol. 56, no. 11, pp. 1–49, May 2024, doi: https://doi.org/10.1145/3666002.
[2] R. Guo, H. Guo, L. Wang, M. Chen, D. Yang, and B. Li, "Development and application of emotion recognition technology — a systematic liter ature review," *BMC Psychology*, vol. 12, no. 1, Feb. 2024, doi: https://doi.org/10.1186/s40359-024-01581-4.
[3] S. Katsigiannis and N. Ramzan, "DREAMER: A Database for Emotion Recognition Through EEG and ECG Signals From Wireless Low-cost Off-the-Shelf Devices," in *IEEE Journal of Biomedical and Health Informatics*, vol. 22, no. 1, pp. 98-107, Jan. 2018, doi: 10.1109/JBHI.2017.2688 239.
[4] A. Gu, K. Goel, A. Gupta, and C. Ré, "On the Parameterization and Initialization of Diagonal State Space Models," *Advances in Neural Inform ation Processing Systems*, vol. 35, pp. 35971–35983, Dec. 2022.
[5] S. Chen, A. Sandryhaila, J. M. F. Moura and J. Kovacevic, "Signal denoising on graphs via graph filtering," *2014 IEEE Global Conference on S ignal and Information Processing (GlobalSIP)*, Atlanta, GA, USA, 2014, pp. 872-876, doi: 10.1109/GlobalSIP.2014.7032244.

Acknowledgements

This research was supported by the MSIT(Ministry of Science and ICT), Korea, under the ITRC(Information Technology Research Center) support program(IITP-2025-RS-2020II201789), and the Artificial Intelligence Convergence Innovation Human Resources Development(IITP-2025-RS-202300254592) supervised by the IITP(Institute for Information & Communications Technology Planning & Evaluation).