AI-Assisted CAD and Design for Manufacturability Evaluation Report

A full engineering review of AI performance across simple, medium, and complex CAD parts

Table of Contents

1. Introduction and Report Objective 2
2. Evaluation Methodology 2
3. Part I - Wrench (wrench_easy): Baseline AI Performance on a Simple Machined Part 2
3.1 Core DFM Findings 3
3.2 Comparison of Different AI Responses for the Wrench 4
3.3 Implementation Review for the Wrench 5
4. Part II - Curved Bracket (yellow_medium): Cross-Model Evaluation on a Medium-Complexity Part 5
4.1 Original DFM Findings 6
4.2 Cross-Model Comparison 7
4.3 Implementation Summary and Remaining Gaps 8
5. Part III - purple_complex: AI Behavior on a High-Complexity Part 8
5.1 Main DFM Findings 9
5.2 Why purplething_complex is the Best Stress Test of AI 10
5.3 Recommended Redesign Priorities 10
6. Overall Evaluation of AI as a CAD and DFM Tool 11
6.1 What AI Did Well 12
6.2 Where AI Was Less Successful 12
6.3 Overall Judgment 12
7. Full Process Followed in This Study 13
8. Final Conclusion 13
Appendix A - Key Evidence Summary Used in This Report 13

1. Introduction and Report Objective

The purpose of this report is not only to review the manufacturability of several CAD parts, but more importantly to evaluate how successfully artificial intelligence can be applied to CAD-based Design for Manufacturability (DFM). In this project, AI was used to inspect geometry, identify machining constraints, rank cost drivers, suggest redesign actions, and in some cases evaluate whether those recommendations were implemented in the CAD model.

The central question of the report is therefore: how good is AI as an engineering support tool for DFM? To answer that question, the report compares AI behavior across three parts of increasing complexity and, where possible, across multiple AI responses or even different models. This makes it possible to assess not only correctness, but also consistency, depth, realism, and practical usefulness.

2. Evaluation Methodology

The evaluation framework used in this report considers AI performance in seven categories: accuracy in identifying manufacturing constraints, consistency across multiple responses, depth of manufacturing knowledge, process planning capability, quality of redesign recommendations, implementation capability, and scalability with part complexity. The parts were intentionally chosen to represent increasing difficulty: a simple 2.5D wrench, a curved multi-axis bracket, and a high-complexity multi-feature housing/bracket with mixed milling and turning demands.

- Accuracy: whether the AI correctly identified real machining, tooling, and fixturing constraints.
- Consistency: whether repeated prompts or different models produced similar conclusions on the same geometry.
- Depth: whether the AI moved beyond obvious comments into quantitative engineering reasoning.
- Process planning: whether the AI proposed plausible setups, tool implications, and machine requirements.
- Optimization quality: whether the suggested redesigns were realistic, high-impact, and aligned with DFM principles.
- Implementation capability: whether the AI could reliably verify or guide actual changes in the CAD feature tree.
- Scalability: whether AI remained useful as part geometry became more complex and manufacturing decisions became more function-dependent.

3. Part I - Wrench (wrench_easy): Baseline AI Performance on a Simple Machined Part

The wrench serves as the baseline case. Geometrically, it is a flat plate-like double-ended wrench with two hexagonal through-features, shallow handle pocketing, and simple edge blends. This makes it a good first test of whether AI can correctly identify straightforward, physics-based machining constraints in a part that is otherwise highly manufacturable.

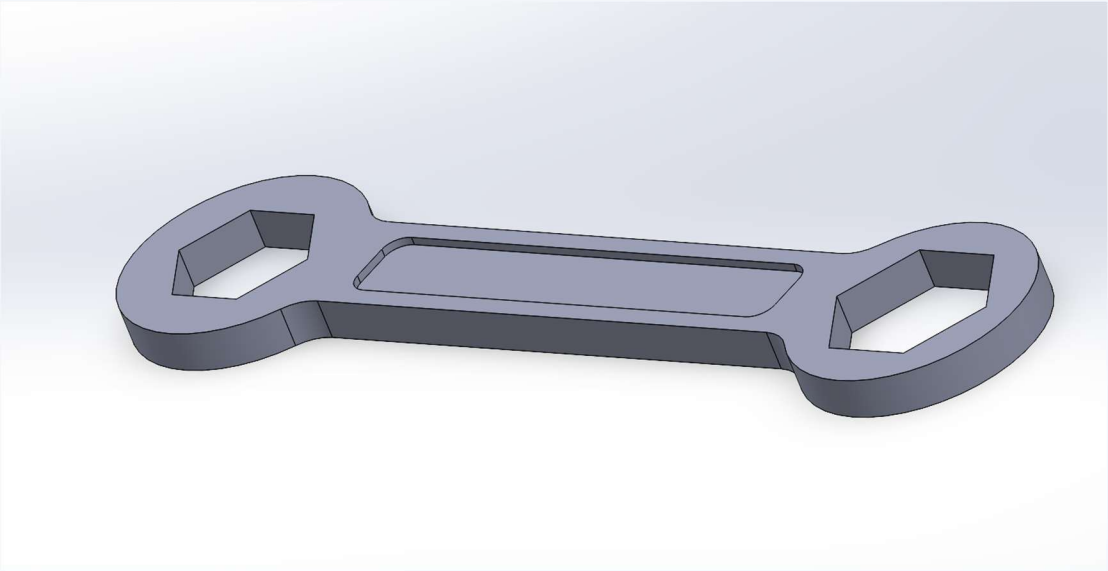

Figure 1: Full CAD view of wrench_easy

3.1 Core DFM Findings

Across multiple AI responses, the core DFM conclusion was highly stable: the dominant manufacturability issue in the original wrench design was the presence of sharp internal corners in the hexagonal through-holes. Standard rotary end mills cannot create a perfectly sharp internal corner, so the part either required a secondary process such as broaching or wire EDM, or a redesign using corner relief radii.

The AI also consistently recognized that the handle pocketing itself was shallow and not a major depth-related risk. In addition, the part had excellent 3-axis accessibility and no genuine undercuts. Therefore, the analysis did not overcomplicate the part; it correctly isolated the true issue rather than labeling every feature as problematic.

Category	AI finding	Engineering meaning	Assessment
Internal hex geometry	Sharp internal corners flagged in both heads	Not producible with a standard end mill without corner relief	Correct and high-impact
Pocket depth/tool ratio	Shallow pocket judged acceptable	No deep-pocket penalty; low aspect ratio	Correct
Setup count	1-2 setups depending on whether a second face feature remained	Reasonable for a flat 2.5D part	Correct
Machine requirement	Pure 3-axis machining feasible	No need for 4th/5th axis if hexes are relieved	Correct
Cost drivers	Hex corners and extra setup ranked highest	Matches actual shop-floor cost logic	Correct

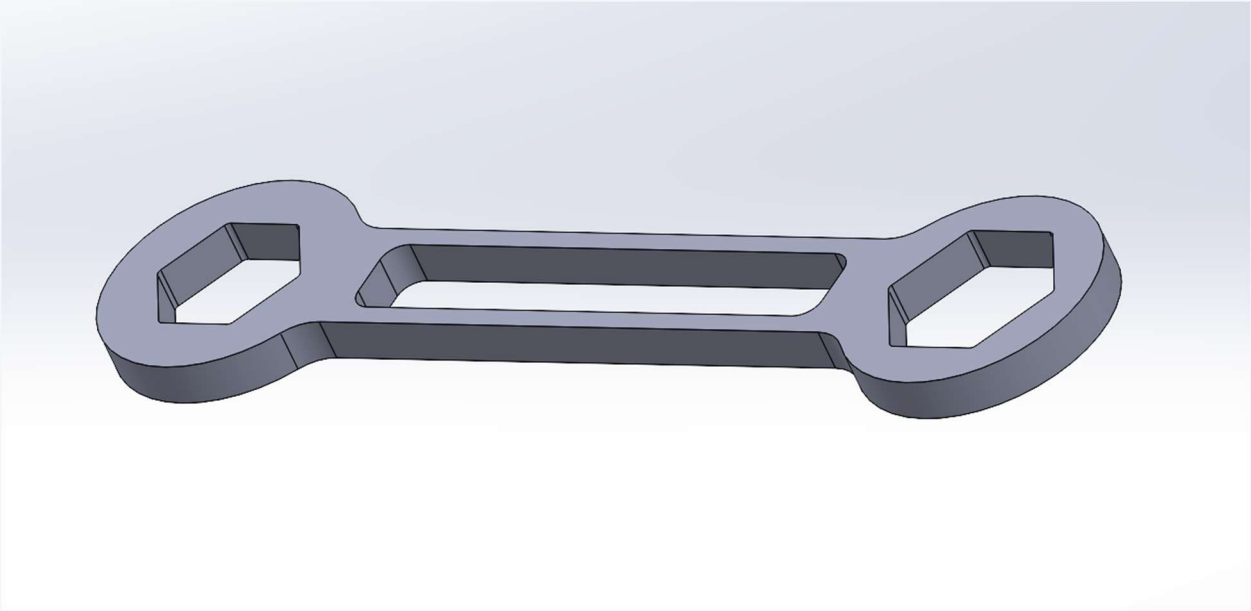

Figure 2: Hex corner problem and redesign

3.2 Comparison of Different AI Responses for the Wrench

The wrench analysis was especially useful because it made it possible to compare several AI responses on the exact same geometry. This revealed an important result: while the wording, numerical estimates, and redesign preferences varied slightly, the fundamental engineering conclusions remained nearly identical. In other words, the AI was highly consistent on the constraints imposed by tooling physics even when it was not perfectly consistent on optimization details.

Aspect	Response pattern	Observed variation	Interpretation
Primary issue	All responses flagged sharp internal hex corners	No meaningful disagreement	Very high consistency on physics-based limits
Setups	All responses estimated roughly two setups before optimization	Minor wording differences	Strong consistency
Recommended hex relief	Roughly R1.0-R2.0 mm suggested depending on response	Small numeric variation	Acceptable engineering variation
Pocket optimization	Some responses suggested single-sided pocketing; another suggested a through-slot	Different redesign paths	Variation in solution strategy, not in issue identification
Risk score	Manufacturability risk around 3/10 before implementation	Essentially unchanged across responses	Strong stability

This is a major finding for the report: AI appears to be most reliable when the question is “what is wrong with this geometry for machining?” and somewhat less uniform when the question becomes “what is the best redesign?” That distinction carries through the entire report.

3.3 Implementation Review for the Wrench

The wrench case also included verification of implemented DFM changes. The highest-value recommendations were actually applied: the mirrored pocketing strategy was converted into a single through-slot, and corner relief fillets of 1.5 mm were added to the hex features. Suppressing the mirrored pocket feature eliminated one setup, while the relieved corners removed the need for EDM or broaching.

Change	Before	After	DFM effect
Pocket strategy	Blind pocketing on both faces / mirrored feature	Single through-slot	Removed one setup and simplified machining
Hex corners	Sharp 120-degree internal corners	1.5 mm corner relief on all hex corners	Made feature fully millable with standard tooling
Feature tree simplification	Mirror feature active	Mirror feature suppressed	Cleaner manufacturing intent and easier CAM setup
Manufacturability score	3/10 risk	2/10 risk	Improved manufacturability after implementation

4. Part II - Curved Bracket (yellow_medium): Cross-Model Evaluation on a Medium-Complexity Part

The second part, yellow_medium, is a curved bracket or clevis-like component with an arched body, inner-surface features, threaded holes, and inconsistent fillet radii. Unlike the wrench, this part introduces serious access and setup complexity, making it a much better test of whether AI can reason about multi-axis machining, fixturing, and the difference between geometry-level issues and implementation-level changes.

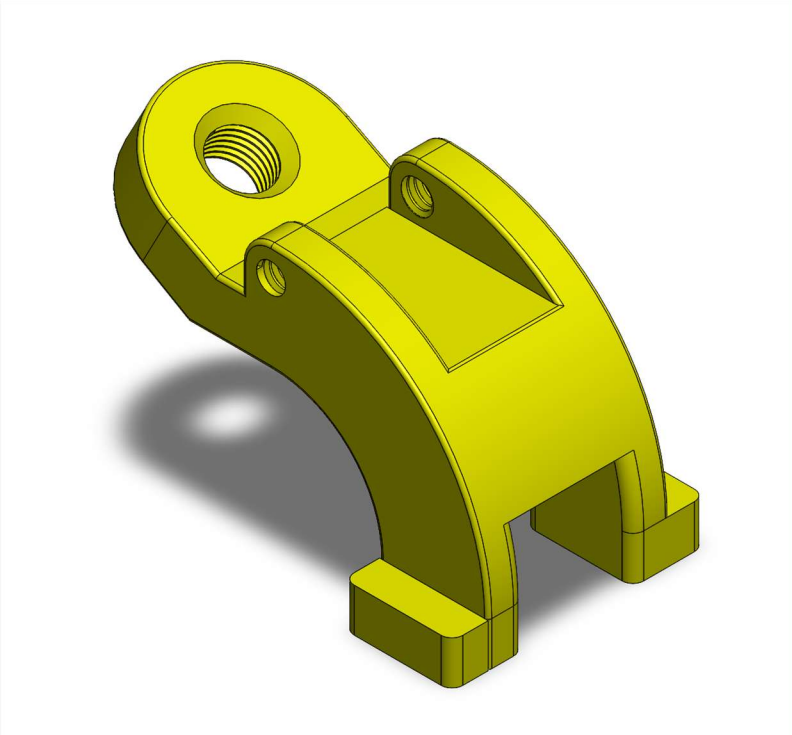

Figure 3: Full CAD view of yellow_medium.

4.1 Original DFM Findings

The AI identified several recurring issues in the original version of this part. The most important were the need for 4th- or 5th-axis machining (or numerous indexed 3-axis setups), small 1 mm fillet radii that forced the use of fragile small tools, excessive thread engagement in the 8 mm threaded hole, and poor access to inner-arc features such as the radially oriented hole and concave pocket. These are all valid medium-level DFM concerns because they do not simply affect cycle time; they fundamentally affect how the part must be manufactured.

DFM issue	Why AI flagged it	Manufacturing consequence	Severity
Inconsistent fillets (R1 and R3)	Small fillets force a <=2 mm tool while other edges could use a larger tool	Extra tool change, slower finishing, greater breakage risk	Medium
Thread engagement ~3.75xD	Thread depth exceeds common 1.5xD rule of thumb	Longer tapping time with no practical strength gain	Medium
Inner-arch hole on concave surface	Feature orientation is poor for ordinary 3-axis access	Likely requires reorientation or multi-axis machine	High
Inner concave pocket	Poor accessibility from standard tool approach	Drives setup count or 5-axis need	High

DFM issue	Why AI flagged it	Manufacturing consequence	Severity
	directions		
Overall arch geometry	No dominant flat manufacturing orientation	Custom fixturing and multiple setups required	High
Two solid bodies / unmerged mirror result	Potential ambiguity in body-level intent	Possible CAM confusion or design cleanup requirement	Low

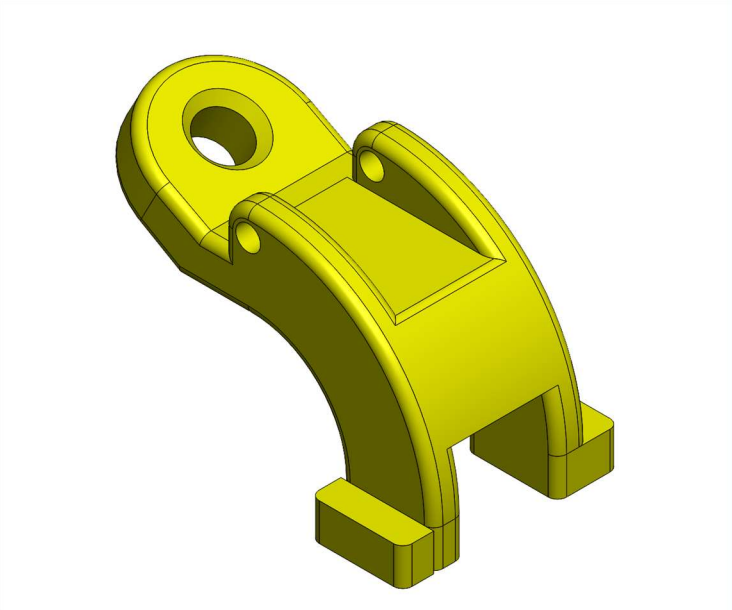

Figure 4: Yellow_medium setup and redesign

4.2 Cross-Model Comparison

A major advantage of the curved bracket case is that it was evaluated by more than one AI prompt. This made it possible to compare not just repeated responses, but actual cross-output behavior. The result was striking: both outputs agreed strongly on the primary manufacturability challenges, but one output was much more detailed in process planning and feature-by-feature setup reasoning while the other was stronger at summarizing implementation and measured improvements.

Comparison area	Prompt A tendency	Prompt B tendency	Evaluation
Constraint identification	Correctly flagged curved geometry, fillet issue, and overdeep threads	Reached the same high-level conclusions	High cross-model consistency
Geometry detail	More concise and decision-focused	More quantified, with more explicit geometric interpretation	Model B deeper; both useful
Setup planning	High-level statement	Detailed orientation-	Model B stronger in

Comparison area	Prompt A tendency	Prompt B tendency	Evaluation
	such as 3-4 setups or 5-axis need	based setup plan (3-axis vs 4-axis vs 5-axis)	manufacturing process planning
Implementation view	Included verified changes and measurable benefits	Stayed largely theoretical	Model A stronger in execution perspective
Overall usefulness	Strong summary and application-oriented output	Stronger shop-floor realism and CAM-minded detail	Best result comes from combining both

This cross-prompt test supports one of the strongest conclusions in the report: AI is not only capable of producing useful DFM analysis, but multiple prompts tend to converge on the same engineering constraints. The variation lies mostly in how much detail they provide and whether they emphasize theory or implementation.

4.3 Implementation Summary and Remaining Gaps

For curved bracket, some design changes were successfully implemented programmatically while others still required manual design decisions. Standardizing the fillets to 3 mm and reducing thread engagement to 1.5xD were successful and offered immediate DFM benefits. However, geometry-level issues such as relocating holes, replacing a concave pocket with a through-slot, or merging non-overlapping bodies could not be resolved automatically without changing design intent.

Implementation status	Example change	Result	What this says about AI
Successful	Standardized all fillets to R3 mm	Reduced tool changes and removed fragile small-tool requirement	AI can support direct feature-level optimization when the geometry change is local and unambiguous
Successful	Reduced thread engagement to 1.5xD	Improved tapping efficiency and lowered breakage risk	AI handles rule-based thread optimization well
Not fully automatable	Merge of two separate solid bodies	Could not combine because there was no overlap	AI still depends on valid CAD topology and human design correction
Not fully automatable	Relocate inner-arch hole / redesign inner pocket	Requires functional approval and possibly structural reconsideration	AI is weak when DFM recommendations conflict with part function or intent

5. Part III - purple_complex: AI Behavior on a High-Complexity Part

The third part, purple_complex, is the most demanding case in the study. It combines mounting features, bosses, tapped holes, grooves that resemble a pulley or turned feature, multiple fillet groups, multiple

chamfers, and a multi-body structure. This part is important because it forces AI to deal with mixed manufacturing processes, not just more difficult milling.

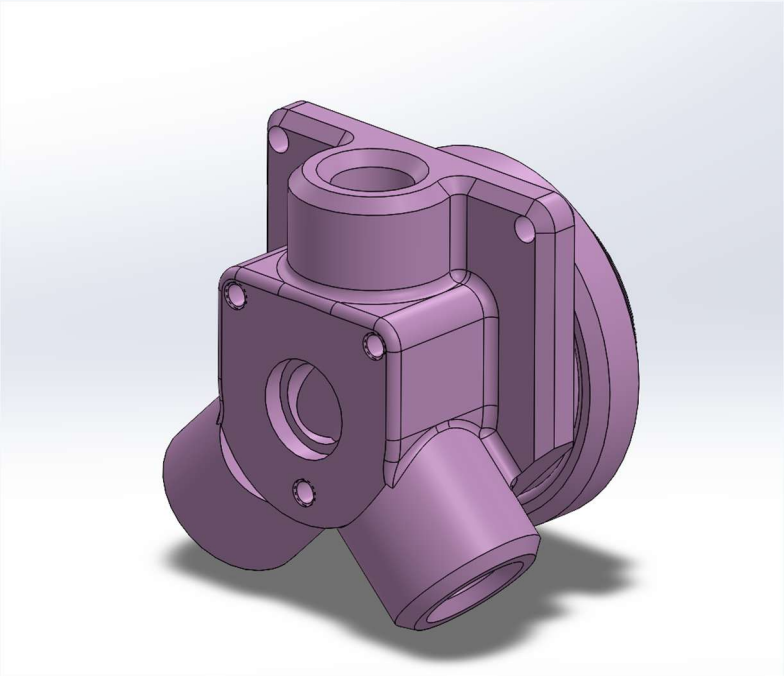

Figure 5 Full CAD view of purple_complex

5.1 Main DFM Findings

The AI correctly identified that the most serious issue in purplething_complex was not a single feature, but the interaction of several features that collectively drove cost and complexity. Deep pockets combined with 1.5 mm fillets forced the use of a 3 mm end mill with a depth-to-tool-diameter ratio around 6.7x, well beyond the common 4x caution threshold. At the same time, the grooved cylindrical region suggested a turning or rotary-axis process, meaning the part naturally straddled the boundary between milling and turning.

Issue	AI interpretation	Manufacturing impact	Severity
Deep pockets with R1.5 mm fillets	Requires a 3 mm tool over roughly 20 mm depth	Low material removal rate, slower feeds, higher breakage risk	High
Pulley-like grooves on cylindrical feature	Best produced by turning or rotary-assisted machining	Drives mixed-process manufacturing and another setup	High
Overall setup count	Estimated roughly 4-5 setups on 3-axis, 2-3 on 5-axis or mill-turn	High non-cutting time and alignment burden	High
M4 tapped holes at 2.0xD engagement	Recognized as overdesigned relative to 1.5xD guideline	Longer tapping time without meaningful gain	Medium
Possible angled or	May require special	Extra setup or fixture cost	Medium

Issue	AI interpretation	Manufacturing impact	Severity
difficult-access cuts	orientation or fixturing		
Two solid bodies	Potential ambiguity in part intent or manufacturability planning	Can complicate CAM setup and documentation	Low-medium

5.2 Why purplething_complex is the Best Stress Test of AI

This part is especially revealing because it exposes the limits of AI more clearly than the simpler parts do. With the wrench, the main question was whether AI knew fundamental tooling limits. With yellowthing, the main question was whether AI understood setup complexity and access. With purplething, AI had to reason about multiple interacting process families at once: milling, tapping, possible turning, fixturing logic, and body-level design intent. The fact that the AI still produced a coherent manufacturability assessment in this case is evidence of strong conceptual capability.

At the same time, the purplething case also shows where AI stops being a near-complete answer. It can state that a separate turned component may be better than a monolithic grooved boss, but it cannot by itself decide whether the design should become an assembly. It can recommend that angled features be made orthogonal, but it cannot know whether that violates the function of the part. This is a recurring pattern: AI is very strong at flagging what drives cost, but weaker at judging what the design is allowed to become.

5.3 Recommended Redesign Priorities

Priority	Recommendation	Reason	Expected benefit
1	Increase small fillets from R1.5 mm to roughly R2.5-R3 mm	Allows a larger cutter in deep pocket areas	Substantial reduction in pocket machining time
2	Separate pulley/groove feature into a turned component or use mill-turn	Removes awkward mixed-process compromise from a pure milling plan	Fewer setups and better groove accuracy
3	Reduce tapped depth from 2.0xD to 1.5xD	Tapping is faster and safer while still providing adequate engagement	Lower risk of tap breakage and lower cycle time
4	Reduce 3-axis setup burden using 5-axis design intent or added datum features	Setup count is the biggest cost driver after mixed processing	Large reduction in non-cutting time
5	Revisit angled / hard-to-access features for more orthogonal machining	Special fixturing is expensive and adds variability	Lower fixture cost and cleaner process plan

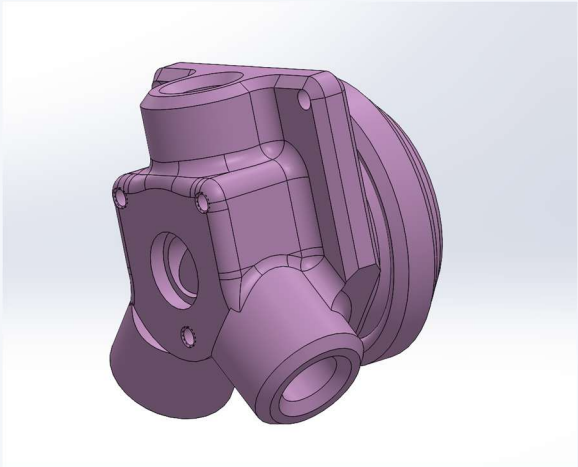

Figure 6: purple_complex feature close-up

6. Overall Evaluation of AI as a CAD and DFM Tool

Once the three parts are considered together, a clear trend appears. AI performs extremely well when it is asked to identify geometry-driven manufacturability constraints. It also performs strongly when it is asked to rank cost drivers and suggest rule-based redesigns, such as increasing fillet radii or reducing overdeep thread engagement. However, AI becomes less reliable as the task shifts from diagnosis to design authority - especially when the recommendation affects part function, assembly architecture, or manufacturing strategy choices that depend on context not present in the CAD geometry alone.

Evaluation category	Score / 10	Interpretation
Accuracy	9.5	AI was extremely good at identifying real manufacturing constraints such as non-machinable corners, poor access, deep pockets, overdeep thread engagement, and mixed-process features.
Consistency	9.0	Repeated responses and different models were highly consistent on fundamentals even when they differed in depth or redesign preference.
Depth of manufacturing knowledge	8.0	AI used meaningful quantitative ideas such as depth-to-tool-diameter ratio and 1.5xD thread rules, but usually did not go into feeds, speeds, or tolerance-stack specifics.
Process planning capability	7.5	Some responses included convincing setup strategies, but fixture design and machine-choice

Evaluation category	Score / 10	Interpretation
		justification remained incomplete.
Optimization quality	8.0	Recommendations were often high-value and reasonable, especially for fillets, thread depth, setup reduction, and feature simplification.
Implementation capability	5.0	AI could validate and summarize local CAD changes, but design-intent conflicts and topology problems still required human intervention.
Scalability with part complexity	7.5	Performance stayed useful as part complexity rose, but became less complete and more dependent on human judgment in the complex cases.

6.1 What AI Did Well

- It correctly identified hard manufacturing limits rather than only cosmetic issues.
- It consistently recognized the most important cost drivers: setups, small tools, deep pockets, and mixed-process features.
- It scaled from simple 2.5D geometry to much more involved parts while still giving meaningful guidance.
- It produced useful redesign suggestions with practical DFM value, especially when the design change was local and rule-based.
- It was surprisingly consistent across repeated responses and even across different models.

6.2 Where AI Was Less Successful

- It could not independently resolve design-intent questions, such as whether a hole may be relocated or whether a part should become an assembly.
- It did not fully replace process planning done by a manufacturing engineer, particularly for fixture design, machine choice justification, and detailed toolpath strategy.
- Implementation remained fragile when CAD body topology prevented a direct feature change, such as trying to merge non-overlapping solid bodies.
- Some suggested redesigns were technically manufacturable but needed human review to verify whether they preserved function or structural performance.

6.3 Overall Judgment

Taken as a whole, the evidence from this study supports a clear conclusion: AI is highly effective as a DFM diagnostic and engineering support tool, but it is not yet a replacement for engineering judgment. It works best as a force multiplier that accelerates early design review, highlights likely cost and manufacturability issues, and helps generate redesign options quickly. The final decision still belongs to the engineer, especially when geometry changes interact with function, assembly logic, or real production constraints.

7. Full Process Followed in This Study

Because the purpose of the project is to evaluate AI application to CAD and DFM, the process itself matters as much as the final answers. The workflow used in this study can be summarized as follows.

Step	What was done	Why it matters for AI evaluation
1. Provide CAD-derived context	Each part was summarized in engineering language, including dimensions, feature types, and relevant geometry.	This tests whether AI can reason effectively from extracted CAD information rather than only from a human-written description.
2. Generate DFM response(s)	AI was prompted to evaluate geometry, holes, setups, cost drivers, and redesign actions.	This measures baseline DFM capability.
3. Compare repeated responses	For the wrench and yellowthing, multiple responses or models were compared.	This reveals whether the tool is consistent or unstable.
4. Attempt implementation or verification	Where possible, recommended changes were applied or checked in the CAD feature tree.	This reveals the gap between good analysis and real CAD execution.
5. Reassess manufacturability	Updated scores and implementation effects were reviewed after changes.	This measures whether AI can support iterative improvement rather than one-time commentary.
6. Synthesize lessons across complexity levels	Results from simple, medium, and complex parts were merged into one evaluation framework.	This provides the evidence needed for a real conclusion about AI usefulness.

8. Final Conclusion

This report demonstrates that AI can be successfully applied to CAD-based DFM at a very useful level. On simple geometry, it performs extremely well and is nearly sufficient on its own as a diagnostic tool. On medium-complexity parts, it remains strong and can even support cross-model validation, showing that its reasoning is not random. On complex parts, it still adds major value by identifying key cost drivers and likely process bottlenecks, but it no longer replaces the need for experienced engineering judgment.

The most accurate overall statement is that AI is already good enough to be integrated into the front end of engineering design review, especially for manufacturability screening, redesign brainstorming, and early cost-risk identification. Its limitations are real, but those limitations do not reduce its usefulness; they define its role. AI should be treated as a powerful DFM assistant and decision-support system, not as the final decision-maker.

Appendix A - Key Evidence Summary Used in This Report

The report content was assembled from the project's own DFM summaries, cross-model comparisons, implementation notes, and final AI evaluation rubric. The most important repeated evidence points were: (1) stable identification of the dominant DFM issue in each part, (2) recurring use of correct manufacturing heuristics such as thread engagement and tool-depth ratios, (3) visible improvement in manufacturability

after local feature edits, and (4) growing limitations as geometry became less prismatic and more process-dependent.