天猫店铺网址：https://telesky.tmall.com

AN3182
Application note

Tilt measurement using a low-*g* 3-axis accelerometer

Introduction

This application note describes the methods and techniques for measuring tilt angles from a low-*g* 3-axis accelerometer. The LIS331DLH 3-axis digital accelerometer is used as an example in this document. Other 3-axis analog or digital accelerometers may also be applied to the tilt angle measurement procedures described here, depending on their respective specifications.

The ultra-low power LIS331DLH digital accelerometer is housed in a 3 x 3 x 1 mm LGA-16 package. It has an I^2C / SPI digital serial interface for 3-axis acceleration outputs, so no external ADC chip is required. It also features a dynamically user-selectable full-scale measurement range of ±2 *g* / ±4 *g* / ±8 *g*, with output data rates from 0.5 Hz to 1 kHz.

Section 1 of this application note introduces the terminology and parameters related to the accelerometer, while *Section 2* presents the accelerometer calibration techniques. *Section 3* describes the tilt sensing theory and the methods of determining tilt angle measurement.

电话：18923720150 邮箱：2355526548@qq.com

天猫店铺网址：https://telesky.tmall.com

Contents

1 Terminology 4

1.1 Accelerometer datasheet 4

1.2 Understanding the parameters 5

1.3 Definitions 6

2 Calibrating the accelerometer 9

3 Calculating tilt angles 10

3.1 Theory of operation 10

3.2 Tilt sensing 11

3.2.1 Single-axis tilt sensing 11

3.2.2 Dual-axis tilt sensing 12

3.2.3 Tri-axis tilt sensing 12

Appendix A Least square method. 14

Revision history 17

电话：18923720150 邮箱：2355526548@qq.com

天猫店铺网址：https://telesky.tmall.com

List of figures

Figure 1. Accelerometer inside a handheld device 6
Figure 2. Pitch definition 7
Figure 3. Roll definition 7
Figure 4. Tilt measurement using a single axis of the accelerometer 10
Figure 5. 360° rotation of a single axis of the accelerometer 11
Figure 6. Plot of 360° rotation of a single axis of the accelerometer 11
Figure 7. Tilt sensitivity of a dual-axis accelerometer 12
Figure 8. Tilt angles from a tri-axis accelerometer 13
Figure 9. Tilt sensitivity of a tri-axis accelerometer 13

电话：18923720150 邮箱：2355526548@qq.com

天猫店铺网址：https://telesky.tmall.com

1 Terminology

Low-*g* MEMS accelerometers are widely used for tilt sensing in consumer electronics and industrial applications, such as screen rotation and automobile security alert systems. Another popular application for low-*g* accelerometers is tilt compensated electronic compasses for map rotation and personal navigation devices. This application note describes how to obtain accurate tilt measurements with respect to local Earth horizontal plane, by compensating for a few non idealities that may cause angular tilt calculation error. In this document, the 3-axis digital accelerometer LIS331DLH is used as an example. For detailed information and device specifications, refer to the LIS331DLH datasheet available at http://www.st.com. Other 3-axis analog or digital accelerometers may also be used, in accordance with their respective specifications.

1.1 Accelerometer datasheet

When designing a tilt sensing system, the first step is to examine the accelerometer specifications and understand the meaning of each parameter that affects tilt sensing accuracy. *Table 1* shows the main parameters of the LIS331DLH 3-axis digital accelerometer when a full-scale of ±2 *g* is selected, which is optimum for tilt sensing applications. Note that higher full-scale ranges can also be selected for tilt sensing, but accuracy is affected by the resulting lower sensitivity.

Table 1. Main parameters for the LIS331DLH @ Vdd = 2.5 V, T = 25 °C

Symbol	Parameter	Test conditions	Min.	Typ.	Max.	Unit
Vdd	Power supply		2.16	2.5	3.6	V
Idd	Current consumption in normal mode			250		µA
ODR	Output data rate in normal mode	Selectable by DR bits in CTRL_REG1		50/100/400/ 1000		Hz
BW	System bandwidth			ODR/2		Hz
Ton	Turn-on time	ODR = 100 Hz		1/ODR + 1		ms
Top	Operating temperature range		-40		+85	°C
FS	Full-scale measurement rage	FS bit set to 00		±2.0		g
So	Sensitivity	FS bit set to 00 12-bit representation	0.9	1	1.1	m*g*/LSB
TCSo	Sensitivity change vs. temperature	FS bit set to 00		±0.01		%/°C
TyOff	Typical zero-*g* level offset accuracy	FS bit set to 00		±20		m*g*
TCOff	Zero-*g* level change vs. temperature	Max delta from 25 °C		±0.1		m*g*/°C
An	Acceleration noise density	FS bit set to 00		218		$(\mu g)/(\sqrt{Hz})$

电话：18923720150 邮箱：2355526548@qq.com

天猫店铺网址：https://telesky.tmall.com

1.2 Understanding the parameters

- Vdd - Power supply: This parameter defines the accelerometer operating DC power supply range between +2.16 V and +3.6 V (typical +2.5 V). Correct operation of the accelerometer using a power supply voltage outside of this range is not guaranteed. The parameters in *Table 1* are provided by the accelerometer manufacturer under Vdd = +2.5 V at a room temperature of T = 25 °C. It is recommended to keep the Vdd clean, with minimum ripple. One possible way to do this is to use an ultra low-noise low-dropout regulator to power the accelerometer.
- Idd - Current consumption in normal mode: In the case of the LIS331DLH, lower ODR corresponds to lower current consumption.
- ODR - Output data rate in normal mode: This parameter shows the possible output data rates in normal mode. The user can select different ODR by setting the DR bits in the CTRL_REG1 register.
- BW - System bandwidth: This parameter defines the bandwidth of the system. When ODR = 100 Hz, BW is typically 50 Hz with built-in low pass filter. The system recognizes any motion below 50 Hz. If the system has dynamic motion higher than 50 Hz, then ODR needs to be increased to a higher setting in order to cover all useful system signals.
- Ton - Turn-on time: This parameter defines the time required before the accelerometer is ready to output measured acceleration data after exiting power-down mode. For example, at ODR = 100 Hz, the user should wait for a minimum of 1/100 + 1 = 11 ms after exiting from power-down mode before sampling the accelerometer data.
- Top - operating temperature range: This parameter defines the operating temperature range. When the device is operated inside the specified range, proper behavior of the sensor is guaranteed.
- FS - Full-scale measurement range: For tilt sensing applications, a ±2.0 *g* range is sufficient because the Earth's gravity is ±1 *g* only. If the application requires measurement of higher *g* acceleration, the user can set the LIS331DLH to a higher full-scale range of ±4.0 *g* or ±8.0 *g*, which results in lower sensitivity.
- So - Sensitivity: This parameter defines the value of 1LSB with respect to m*g* in the digital representation. For example, at ±2.0 *g* full-scale range, the sensitivity is typically about 1 m*g*/LSB at 12-bit representation. Therefore, when the sensor is stable on a horizontal surface, the Z axis output is around 1000LSB.
- TCSo - Sensitivity change vs. temperature: This parameter defines how sensitivity changes with temperature. For example, at a ±2.0 *g* full-scale range, the sensitivity changes within ±0.01%/°C. Therefore, if the environmental temperature changes 40 °C, from 25 °C to 65 °C, then the sensitivity changes within the range of ±0.01% * 40 = ±0.4%, which means the sensitivity change over 40 °C is within 0.996 m*g*/LSB and 1.004 m*g*/LSB, which shows that the sensitivity is very stable versus temperature change. Thus, temperature compensation for sensitivity can be ignored.
- TyOff - Typical zero-*g* level offset accuracy: This parameter defines the zero-*g* accuracy at a room temperature of 25 °C. For example, at a ±2.0 *g* full-scale range, the zero-*g* accuracy of ±20 m*g* means that the zero-*g* output varies typically in the range of ±20 m*g* around the expected ideal value.
- TCOff - Zero-*g* level change vs. temperature: This parameter defines how much the zero-*g* level is affected by temperature variations. For example, at ±2.0 *g* full-scale range, the zero-*g* level changes typically within ±0.1 mg/°C. This means that if the environmental temperature changes 40 °C, from 25 °C to 65 °C, then the zero-*g* level changes within the range of ±0.1 mg * 40 = ±4 m*g*, which shows that the zero-*g* level is

电话：18923720150 邮箱：2355526548@qq.com

天猫店铺网址：https://telesky.tmall.com

very stable versus temperature change. So temperature compensation for the zero-*g* level can be ignored.

- An - Acceleration noise density: This parameter defines the standard resolution the user can obtain from the accelerometer (once the desired BW is selected).

  1 σ resolution = $A_n(\mu g/\sqrt{Hz}) \cdot \sqrt{BW(Hz)}$. The higher BW leads to lower resolution.

- NL - Non linearity: This parameter defines the maximum error between the outputs and the best fit straight line. For example, at ±2.0 *g* full-scale range, the non linearity of 0.5% of FS means the largest error is 0.5% * 4000 m*g* = 2 m*g*, which corresponds to 0.1°. When the application requires measurements of around the 0 *g* condition (as with tilt measurement), the non-linearity effect is negligible and can be ignored.
- CrossAx - Cross-axis sensitivity: The cross-axis effect arises due to natural misalignment of die positioning on the package substrate. Even if negligible in most applications, for very accurate tilt measurement the cross-axis sensitivity effect can be easily compensated for by following the procedure in *Section 2: Calibrating the accelerometer*. Moreover, when the device is placed on the final application board, the accelerometer calibration compensates both the device cross-axis sensitivity, and the misalignment between the accelerometer sensing axes and the board axes.

1.3 Definitions

Assume that the LIS331DLH accelerometer is installed in a handheld device, such as a cell phone, a PDA or simply on a PCB board as shown in *Figure 1*.

Figure 1. Accelerometer inside a handheld device

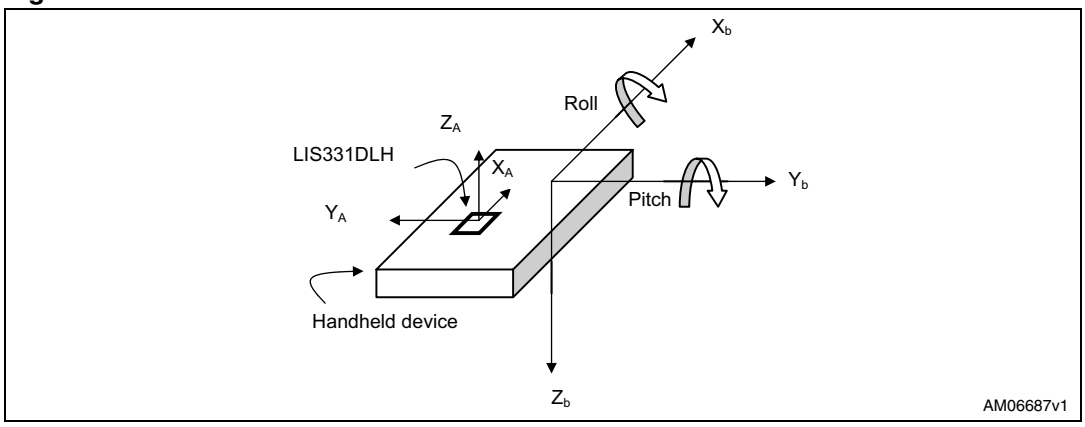

X_b, Y_b and Z_b are the handheld device body axes with a forward-right-down configuration.

X_A, Y_A and Z_A are the accelerometer sensing axes, respectively. Note that the sign of Y_A and Z_A from the sensor measurements need to be reversed to have the sensing axes in the same direction as the device body axes.

Pitch and roll angles are referenced to the local horizontal plane, which is perpendicular to the Earth's gravity.

- Pitch (α) is defined as the angle between the X_b axis and the horizontal plane. Assume that the pitch angle resolution is 0.1°, then it goes from 0° to +179.9° when rotating around the Y_b axis with the X_b axis moving upwards from a flat level, and then keeps moving from a vertical position (+90°) back to a flat level again. The pitch angle goes from 0° to -180° when the X_b axis is moving downwards from a flat level, and then

电话：18923720150 邮箱：2355526548@qq.com

天猫店铺网址：https://telesky.tmall.com

keeps moving from a vertical position (-90°) back to a flat level again. For example, in *Figure 2*, Y_b is fixed, X_b is rotating from Pitch = 0° to +30°, +90°, +150° and +179.9° for a positive direction.

- Roll (β) is defined as the angle between the Y_b axis and the horizontal plane. Assume that the roll angle resolution is 0.1°, then it goes from 0° to +179.9° when rotating around the Xb axis with the Y_b axis moving downwards from a flat level, and then keeps moving from a vertical position (+90°) back to a flat level again. The roll angle goes from 0° to -180° when the Y_b axis is moving upwards from a flat level, and then keeps moving from a vertical position (-90°) back to a flat level again. For example, in *Figure 3*, X_b is fixed, Y_b is rotating from roll = 0° to +30°, +90°, +150° and +179.9° for a positive direction.

Figure 2. Pitch definition

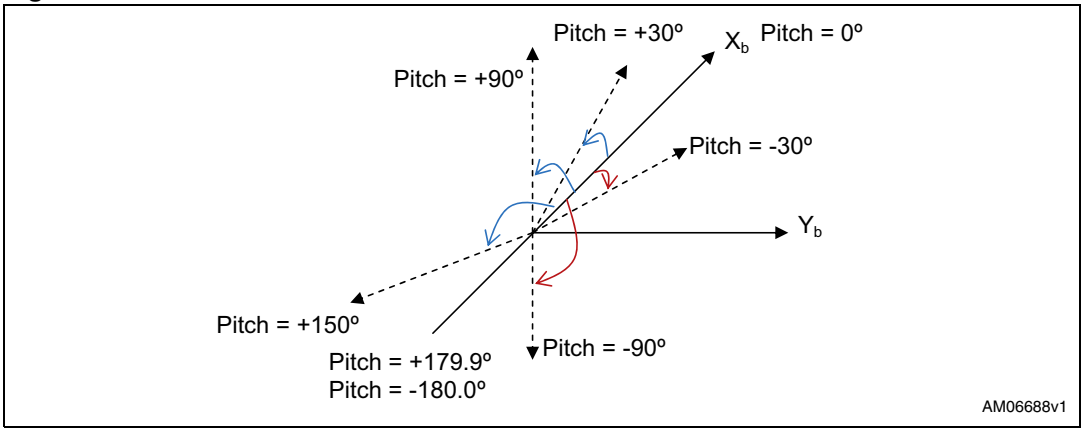

Figure 3. Roll definition

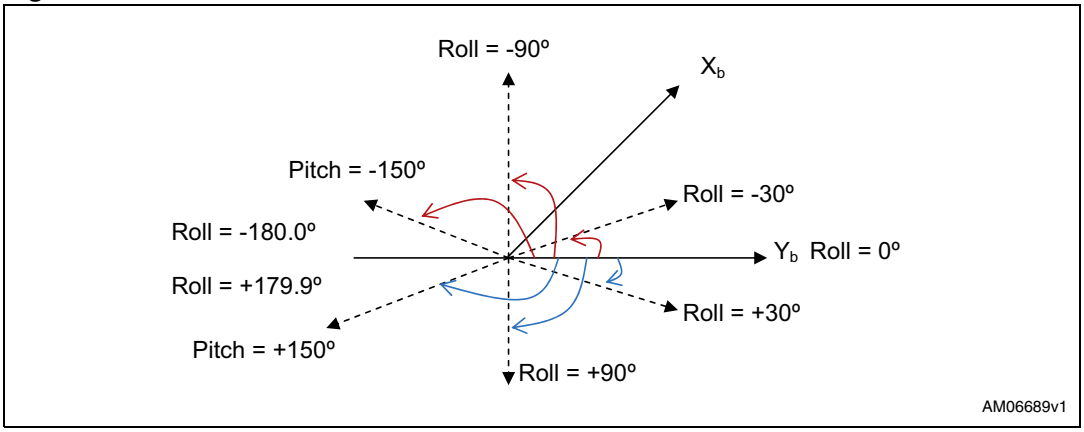

Assume A_x, A_y, A_z is the accelerometer raw measurement in the format of LSBs. *Table 2* shows the sign definition of the raw sensor data at 6 stationary positions with respect to the known Earth gravity vector. For example, in *Figure 1*, X_b and Y_b are level and Z_b is pointing down. Therefore, $A_x = A_y = 0$, $A_z = +1$ *g*.

电话：18923720150 邮箱：2355526548@qq.com

天猫店铺网址：https://telesky.tmall.com

Table 2. Sign definition of LIS331DLH sensor raw measurements

Stationary position	Accelerometer (signed integer)		
	A_x	A_y	A_z
Z_b down	0	0	+1 *g*
Z_b up	0	0	-1 *g*
Y_b down	0	+1 *g*	0
Y_b up	0	-1 *g*	0
X_b down	+1 *g*	0	0
X_b up	-1 *g*	0	0

电话：18923720150 邮箱：2355526548@qq.com

天猫店铺网址：https://telesky.tmall.com

2 Calibrating the accelerometer

Section 1 describes the accelerometer parameters and the definition of the pitch and roll tilt angles. The next step is to calibrate the accelerometer before tilt calculation can take place.

Please note that all accelerometers from ST, including the LIS331DLH, have been factory-calibrated. For most applications, such as screen portrait/landscape rotation and laptop lid open/close detection, accelerometer calibration is not necessary. This means that users can use the zero-*g* level and sensitivity parameters from the datasheet directly to convert raw measurements A_x, A_y and A_z to normalized measurements A_{x1}, A_{y1} and A_{z1}. For applications that require better than 1° tilt-measurement accuracy, such as automobile alert systems, tilt-compensated electronic compasses and level monitoring systems, accelerometer calibration is suggested.

The relationship between the normalized A_{x1}, A_{y1} and A_{z1} and the accelerometer raw measurements A_x, A_y and A_z can be expressed as,

Equation 1

$$\begin{bmatrix} A_{x1} \\ A_{y1} \\ A_{z1} \end{bmatrix} = [A_m]_{3x3} \begin{bmatrix} 1/A_SC_x & 0 & 0 \\ 0 & 1/A_SC_y & 0 \\ 0 & 0 & 1/A_SC_z \end{bmatrix} \cdot \begin{bmatrix} A_x - A_OS_x \\ A_y - A_OS_y \\ A_z - A_OS_z \end{bmatrix}$$
$$= \begin{bmatrix} ACC_{11} & ACC_{12} & ACC_{13} \\ ACC_{21} & ACC_{22} & ACC_{23} \\ ACC_{31} & ACC_{32} & ACC_{33} \end{bmatrix} \cdot \begin{bmatrix} A_x \\ A_y \\ A_z \end{bmatrix} + \begin{bmatrix} ACC_{10} \\ ACC_{20} \\ ACC_{30} \end{bmatrix}$$

where [A_m] is the 3 x 3 misalignment matrix between the accelerometer sensing axes and the device body axes, A_SC_i (i = x, y, z) is the sensitivity (or scale factor) and A_OS_i is the zero-*g* level (or offset).

The goal of accelerometer calibration is to determine 12 parameters from ACC10 to ACC33, so that with any given raw measurements at arbitrary positions, the normalized values A_{x1}, A_{y1} and A_{z1} can be obtained, resulting in:

Equation 2

$$|A| = \sqrt{A_{x1}^2 + A_{y1}^2 + A_{z1}^2} = 1$$

Calibration can be performed at 6 stationary positions as shown in *Table 2*. Collect 5 to 10 seconds of accelerometer raw data with ODR = 100 Hz at each position with known A_{x1}, Ay1 and Az1. Then apply the least square method to obtain the 12 accelerometer calibration parameters. Refer to *Appendix A* for additional details.

电话：18923720150 邮箱：2355526548@qq.com

天猫店铺网址：https://telesky.tmall.com

3 Calculating tilt angles

3.1 Theory of operation

Figure 4 shows the single sensing axis of the accelerometer for tilt measurement.

Figure 4. Tilt measurement using a single axis of the accelerometer

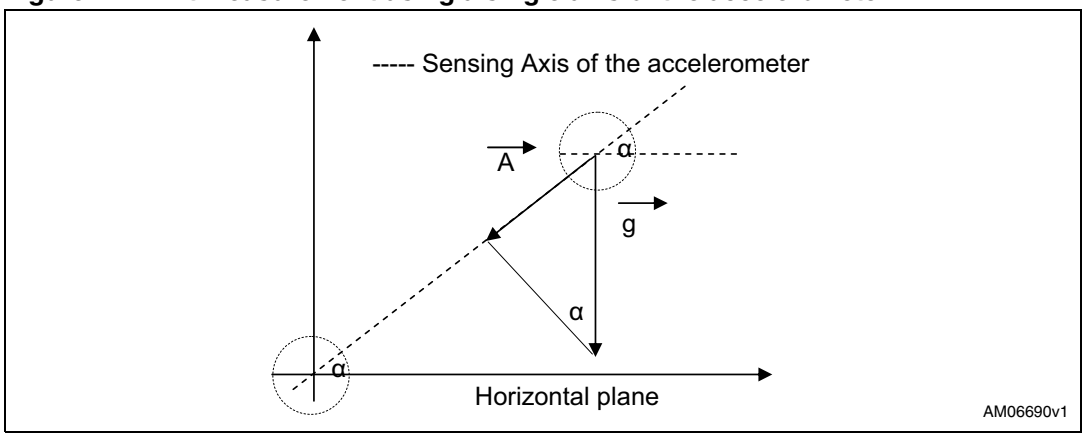

The accelerometer measures the projection of the gravity vector on the sensing axis. The amplitude of the sensed acceleration changes as the sin of the angle α between the sensitive axis and the horizontal plane.

Equation 3

$$A = g \times \sin(\alpha)$$

Using *Equation 3*, it is possible to estimate the tilt angle,

Equation 4

$$\alpha = \arcsin\left(\frac{A}{g}\right)$$

where:

- A = acceleration measured
- g = Earth gravity vector

A single axis of the accelerometer with 360° rotation is shown in *Figure 5* and *6*.

电话：18923720150 邮箱：2355526548@qq.com

天猫店铺网址：https://telesky.tmall.com

Figure 5. 360° rotation of a single axis of the accelerometer

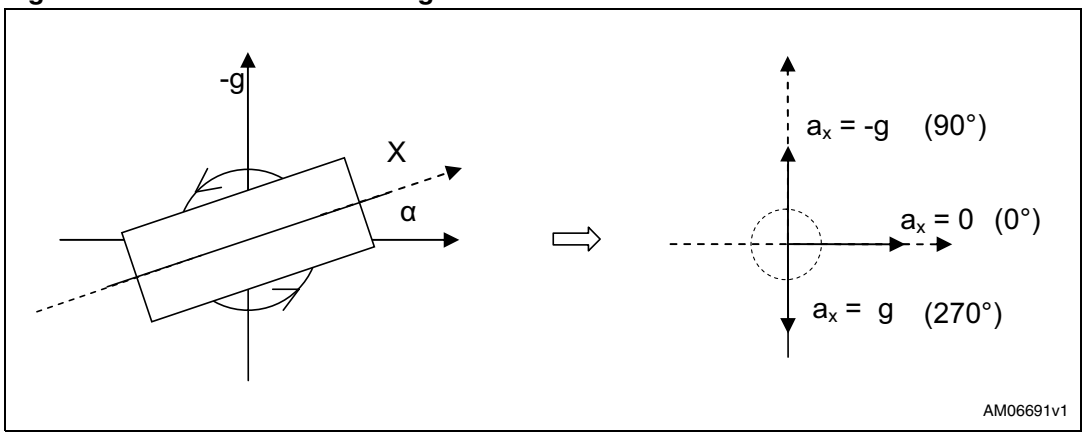

Figure 6. Plot of 360° rotation of a single axis of the accelerometer

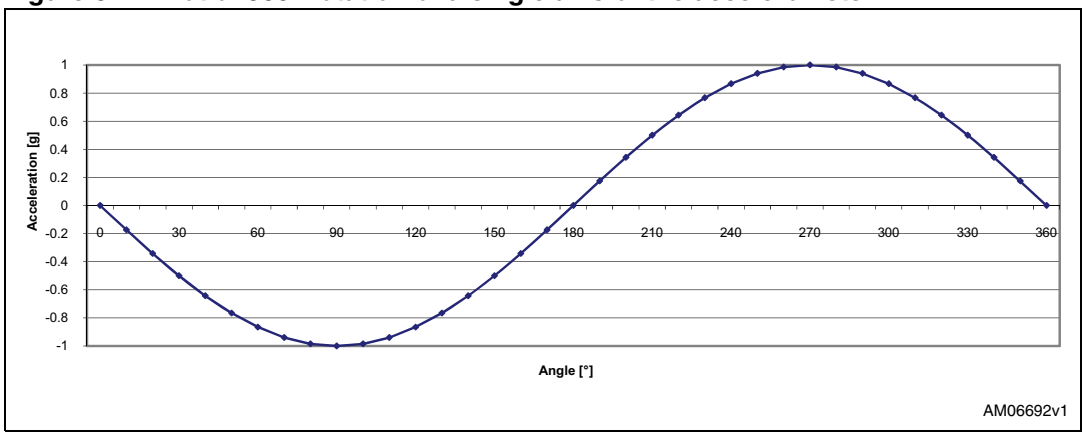

3.2 Tilt sensing

3.2.1 Single-axis tilt sensing

From *Figure 5* and *6*, it can be observed that the sensor is most responsive to changes in tilt angle when the sensing axis is perpendicular to the force of gravity. In this case, the sensitivity is approximately 17.45 m*g*/° [= sin(1°) - sin(0°)]. Due to the derivate function of the sin function, the sensor has lower sensitivity (less responsive to tilt angle changes) when the sensing axis is close to its +1 *g* or -1 *g* position. In this case, sensitivity is only 0.15 mg/° [= sin(90°) - sin(89°)]. *Table 3* shows the sensitivity at different tilt angles. In other words, the sin function has good linearity at [0° 45°], [135° 225°] and [315° 36°] as shown in *Figure 6*.

Table 3. Tilt sensitivity of single axis accelerometer

Tilt [°]	Acceleration [*g*]	Δ*g* /° [m*g*/°]
0	0.000	17.452
15	0.259	16.818
30	0.500	15.038
45	0.707	12.233

电话：18923720150 邮箱：2355526548@qq.com

天猫店铺网址：https://telesky.tmall.com

Table 3. Tilt sensitivity of single axis accelerometer (continued)

Tilt [°]	Acceleration [*g*]	Δ*g* /° [m*g*/°]
60	0.866	8.594
75	0.966	4.37
90	1.000	0.152

3.2.2 Dual-axis tilt sensing

When a dual-axis tilt sensing approach is used, the user should be aware of two different situations in which this approach could limit overall accuracy or even inhibit tilt calculation.

- *Figure 7*, Example A: Rotate the accelerometer counter-clockwise around the dotted arrow with β angle. When β is less than 45°, the X axis has higher sensitivity, while the Y axis has lower sensitivity. And when β is greater than 45°, the X axis has lower sensitivity while the Y axis has higher sensitivity. Therefore, when the two-axis approach is used, it is always recommended to calculate the angle based on the orthogonal axis to a ±1 *g* condition.
- *Figure 7*, Example B: At this position, both the X and Y axes have high sensitivity. However, without the help of a third axis (for example the Z axis), it is impossible to distinguish a tilt angle of 30° from one of 150° because the X axis has the same outputs at these two tilt angles.

Figure 7. Tilt sensitivity of a dual-axis accelerometer

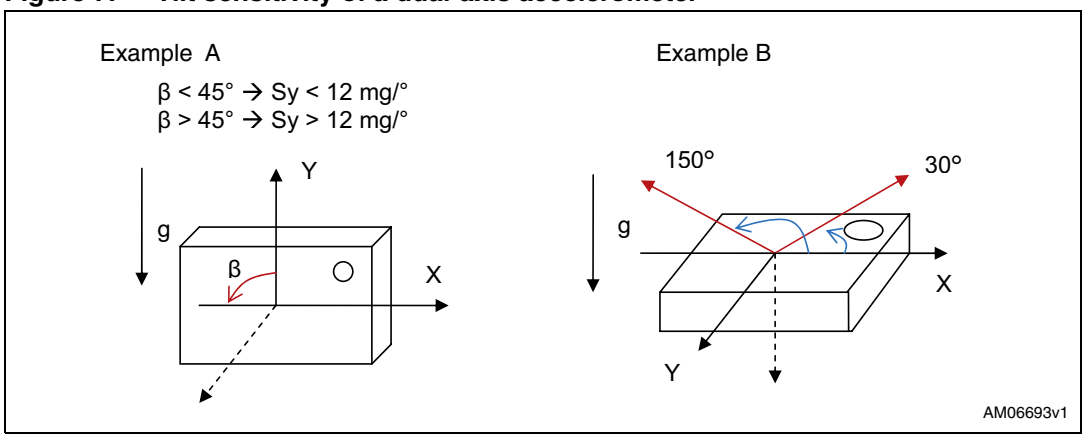

3.2.3 Tri-axis tilt sensing

With a 3-axis accelerometer, the user can use the Z axis to combine with the X and Y axes for tilt sensing, to improve tilt sensitivity and accuracy (see *Figure 8*).

There are two ways to calculate 3 tilt angles in *Figure 8*. The first is use basic trigonometric *Equation 5*, *6* and *7*, where A_{x1}, A_{y1} and A_{z1} are the values obtained after applying accelerometer calibration on raw measurement data (A_x, A_y, A_z), as described in *Section 2*.

Equation 5

$$\alpha = \arcsin\left(\frac{A_{x1}}{g}\right)$$

电话：18923720150 邮箱：2355526548@qq.com

天猫店铺网址：https://telesky.tmall.com

Equation 6

$$\beta = \arcsin\left(\frac{A_{y1}}{g}\right)$$

Equation 7

$$\gamma = \arccos\left(\frac{A_{z1}}{g}\right)$$

Figure 8. Tilt angles from a tri-axis accelerometer

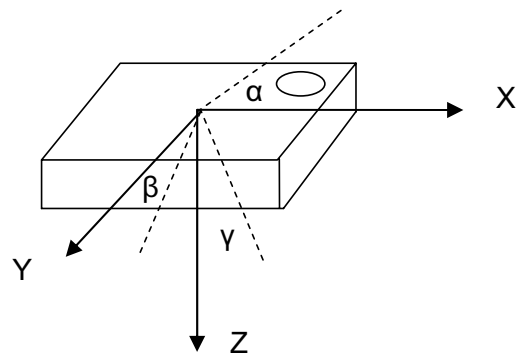

The second way is to use trigonometric *Equation 8* and *9* to calculate pitch and roll tilt angle, which produces constant sensitivity over 360° of rotation, as shown in *Figure 9*.

Equation 8

$$\text{Pitch} = \alpha = \arctan\left(\frac{A_{x1}}{\sqrt{(A_{y1})^2 + (A_{z1})^2}}\right)$$

Equation 9

$$\text{Roll} = \beta = \arctan\left(\frac{A_{y1}}{\sqrt{(A_{x1})^2 + (A_{z1})^2}}\right)$$

Figure 9. Tilt sensitivity of a tri-axis accelerometer

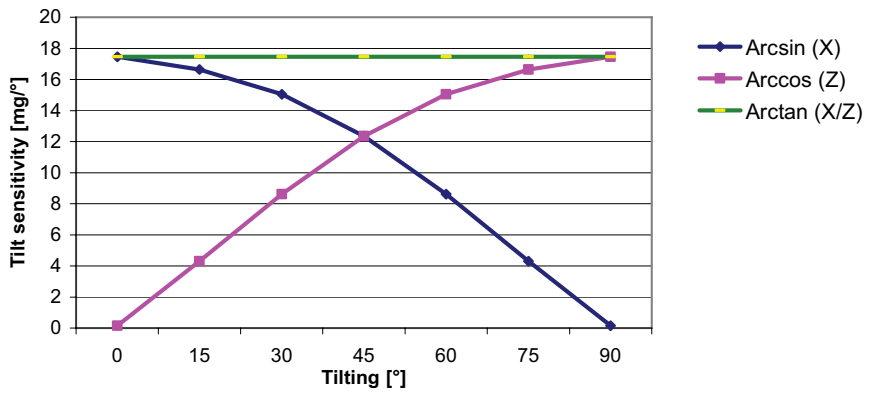

电话：18923720150 邮箱：2355526548@qq.com

天猫店铺网址：https://telesky.tmall.com

Appendix A Least square method

Let's consider accelerometer calibration at the 6 stationary positions shown in *Table 2*. *Equation 1* can be rewritten as:

Equation 10

$$\begin{bmatrix} A_{x1} & A_{y1} & A_{z1} \end{bmatrix} = \begin{bmatrix} A_x & A_y & A_z & 1 \end{bmatrix} \cdot \begin{bmatrix} ACC_{11} & ACC_{21} & ACC_{31} \\ ACC_{12} & ACC_{22} & ACC_{32} \\ ACC_{13} & ACC_{23} & ACC_{33} \\ ACC_{10} & ACC_{20} & ACC_{30} \end{bmatrix}$$

Or

Equation 11

$$Y = w \cdot X$$

where:

- Matrix X is the 12 calibration parameters that need to be determined
- Matrix w is sensor raw data LSBs collected at 6 stationary positions
- Matrix Y is the known normalized Earth gravity vector

For example,

- At Z_b down position (P1 position), $\begin{bmatrix} A_{x1} & A_{y1} & A_{z1} \end{bmatrix} = \begin{bmatrix} 0 & 0 & 1 \end{bmatrix}$, and assume that at Z_b down position, n1 sets of accelerometer raw data A_x, A_y and A_z have been collected. Then,

Equation 12

$$Y_1 = \begin{bmatrix} 0 & 0 & 1 \end{bmatrix}_{n1x3}$$
$$w_1 = \begin{bmatrix} A_{xP1} & A_{yP1} & A_{zP1} & 1 \end{bmatrix}_{n1x4}$$

where:

Matrix Y_1 has the same row of [0 0 1].

Matrix w_1 contains raw data in the format of LSBs.

- At Z_b up position (P2 position), $\begin{bmatrix} A_{x1} & A_{y1} & A_{z1} \end{bmatrix} = \begin{bmatrix} 0 & 0 & -1 \end{bmatrix}$, and assume that at Z_b up position, n2 sets of accelerometer raw data A_x, A_y and A_z have been collected. Then,

Equation 13

$$Y_2 = \begin{bmatrix} 0 & 0 & -1 \end{bmatrix}_{n2x3}$$
$$w_2 = \begin{bmatrix} A_{xP2} & A_{yP2} & A_{zP2} & 1 \end{bmatrix}_{n2x4}$$

- At Y_b down position (P3 position), $\begin{bmatrix} A_{x1} & A_{y1} & A_{z1} \end{bmatrix} = \begin{bmatrix} 0 & 1 & 0 \end{bmatrix}$, and assume that at Y_b down position, n3 sets of accelerometer raw data A_x, A_y and A_z have been collected. Then,

电话：18923720150 邮箱：2355526548@qq.com

天猫店铺网址：https://telesky.tmall.com

Equation 14

$$Y_3 = \begin{bmatrix} 0 & 1 & 0 \end{bmatrix}_{n3x3}$$
$$w_3 = \begin{bmatrix} A_{xP3} & A_{yP3} & A_{zP3} & 1 \end{bmatrix}_{n3x4}$$

- At Y_b up position (P4 position), $\lfloor A_{x1} \quad A_{y1} \quad A_{z1} \rfloor = [0 \quad -1 \quad 0]$, and assume that at Y_b up position, n4 sets of accelerometer raw data A_x, A_y and A_z have been collected. Then,

Equation 15

$$Y_4 = \begin{bmatrix} 0 & -1 & 0 \end{bmatrix}_{n4x3}$$
$$w_4 = \begin{bmatrix} A_{xP4} & A_{yP4} & A_{zP4} & 1 \end{bmatrix}_{n4x4}$$

- At X_b down position (P5 position), $\lfloor A_{x1} \quad A_{y1} \quad A_{z1} \rfloor = [1 \quad 0 \quad 0]$, and assume that at Xb down position, n5 sets of accelerometer raw data A_x, A_y and A_z have been collected. Then,

Equation 16

$$Y_5 = \begin{bmatrix} 1 & 0 & 0 \end{bmatrix}_{n5x3}$$
$$w_5 = \begin{bmatrix} A_{xP5} & A_{yP5} & A_{zP5} & 1 \end{bmatrix}_{n5x4}$$

- At X_b up position (P6 position), $\lfloor A_{x1} \quad A_{y1} \quad A_{z1} \rfloor = [-1 \quad 0 \quad 0]$, and assume that at X_b up position, n6 sets of accelerometer raw data A_x, A_y and A_z have been collected. Then,

Equation 17

$$Y_6 = \begin{bmatrix} -1 & 0 & 0 \end{bmatrix}_{n6x3}$$
$$w_6 = \begin{bmatrix} A_{xP6} & A_{yP6} & A_{zP6} & 1 \end{bmatrix}_{n6x4}$$

Combine *Equation 12* to *17* and let n = n1 + n2 + n3 + n4 + n5 + n6, then *Equation 11* becomes:

Equation 18

$$Y_{nx3} = w_{nx4} \cdot X_{4x3}$$

where:

Equation 19

$$Y = \begin{bmatrix} Y_1 \\ Y_2 \\ Y_3 \\ Y_4 \\ Y_5 \\ Y_6 \end{bmatrix}_{nx3}$$
$$w = \begin{bmatrix} w_1 \\ w_2 \\ w_3 \\ w_4 \\ w_5 \\ w_6 \end{bmatrix}_{nx4}$$

电话：18923720150 邮箱：2355526548@qq.com

天猫店铺网址：https://telesky.tmall.com

Therefore, the calibration parameter matrix X can be determined by the least square method as:

Equation 20

$$X = \left[w^T \cdot w\right]^{-1} \cdot w^T \cdot Y$$

where:

Equation 21

w^T means matrix transpose

$\left[w^T \cdot w\right]^{-1}$ means matrix inverse

电话：18923720150 邮箱：2355526548@qq.com

天猫店铺网址：https://telesky.tmall.com

Revision history

Table 4. Document revision history

Date	Revision	Changes
21-Apr-2010	1	Initial release.

电话：18923720150 邮箱：2355526548@qq.com

天猫店铺网址：https://telesky.tmall.com

电话：18923720150 邮箱：2355526548@qq.com