天猫店铺网址：https://telesky.tmall.com

LSM303DLH

Sensor module: 3-axis accelerometer and 3-axis magnetometer

Features

- Analog supply voltage: 2.5 V to 3.3 V
- Digital supply voltage IOs: 1.8 V
- Power-down mode
- 3 magnetic field channels and 3 acceleration channels
- ±1.3 to ±8,1 gauss magnetic field full-scale
- ±2 *g*/±4 *g*/±8 *g* dynamically selectable full-scale
- 16-bit data out
- I^2C serial interface
- 2 independent programmable interrupt generators for free-fall and motion detection
- Embedded self-test
- Accelerometer sleep-to-wakeup function
- 6D orientation detection
- ECOPACK® RoHS and "Green" compliant (see *Section 10*)

Applications

- Compensated compassing
- Map rotation
- Position detection
- Motion-activated functions
- Free-fall detection
- Intelligent power-saving for handheld devices
- Display orientation
- Gaming and virtual reality input devices
- Impact recognition and logging
- Vibration monitoring and compensation

Description

The LSM303DLH is a system-in-package featuring a 3D digital linear acceleration sensor

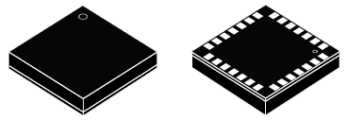

LGA-28L (5x5x1.0 mm)

and a 3D digital magnetic sensor. The various sensing elements are manufactured using specialized micromachining processes, while the IC interfaces are realized using a CMOS technology that allows the design of a dedicated circuit which is trimmed to better match the sensing element characteristics. The LSM303DLH has a linear acceleration full-scale of ±2 *g* / ±4 *g* / ±8 *g* and a magnetic field full-scale of ±1.3 / ±1.9 / ±2.5 / ±4.0 / ±4.7 / ±5,6 / ±8.1 gauss, both fully selectable by the user. The LSM303DLH includes an I^2C serial bus interface that supports standard mode (100 kHz) and fast mode (400 kHz). The internal self-test capability allows the user to check the functioning of the whole module in the final application. The system can be configured to generate an interrupt signal by inertial wakeup/free-fall events, as well as by the position of the device itself. Thresholds and timing of interrupt generators are programmable on the fly by the end user. Magnetic and accelerometer parts can be enabled or put in power-down mode separately. The LSM303DLH is available in a plastic land grid array (LGA) package, and is guaranteed to operate over an extended temperature range from -30 to +85 °C.

Table 1. Device summary

Part number	Temp. range [°C]	Package	Packing
LSM303DLH	-30 to +85	LGA-28	Tray
LSM303DLHTR			Tape and reel

电话：18923720150 邮箱：2355526548@qq.com

天猫店铺网址：https://telesky.tmall.com

Contents

1 Block diagram and pin description 8

1.1 Block diagram 8

1.2 Pin description 9

2 Module specifications 11

2.1 Mechanical characteristics 11

2.2 Electrical characteristics 13

2.3 Communication interface characteristics 14

2.3.1 Accelerometer sensor I2C - inter IC control interface 14

2.3.2 Magnetic field sensing I2C digital interface 15

3 Absolute maximum ratings 16

4 Terminology 17

4.1 Linear acceleration sensitivity 17

4.2 Zero-g level 17

4.3 Sleep-to-wakeup 17

5 Functionality 18

5.1 Factory calibration 18

5.2 Linear acceleration self-test operation 18

5.3 Magnetic self-test operation 18

6 Application hints 20

6.1 External capacitors 21

6.2 Pull-up resistors 21

6.3 Digital interface power supply 21

6.4 Soldering information 21

6.5 High current wiring effects 22

7 Digital interfaces 23

7.1 I2C serial interface 23

7.1.1 I2C operation 24

电话：18923720150 邮箱：2355526548@qq.com

天猫店铺网址：https://telesky.tmall.com

7.1.2 Linear acceleration digital interface 25
7.1.3 Magnetic field digital interface 25

8 Register mapping 27

9 Registers description 29

9.1 Linear acceleration register 29
9.1.1 CTRL_REG1_A (20h) 29
9.1.2 CTRL_REG2_A (21h) 30
9.1.3 CTRL_REG3_A (22h) 31
9.1.4 CTRL_REG4_A (23h) 32
9.1.5 CTRL_REG5_A (24h . . . . .) 33
9.1.6 HP_FILTER_RESET_A (25h) 33
9.1.7 REFERENCE_A (26h) 33
9.1.8 STATUS_REG_A(27h) 34
9.1.9 OUT_X_L_A (28h), OUT_X_H_A (29h) 34
9.1.10 OUT_Y_L_A (2Ah), OUT_Y_H_A (2Bh) 34
9.1.11 OUT_Z_L_A (2Ch), OUT_Z_H_A (2Dh) 34
9.1.12 INT1_CFG_A (30h) 35
9.1.13 INT1_SRC_A (31h) 36
9.1.14 INT1_THS_A (32h) 36
9.1.15 INT1_DURATION_A (33h) 36
9.1.16 INT2_CFG_A (34h) 37
9.1.17 INT2_SRC_A (35h) 38
9.1.18 INT2_THS_A (36h) 38
9.1.19 INT2_DURATION_A (37h) 38
9.2 Magnetic field sensing register description 39
9.2.1 CRA_REG_M (00h) 39
9.2.2 CRB_REG_M (01h) 40
9.2.3 MR_REG_M (02h) 40
9.2.4 OUT_X_M (03-04h) 41
9.2.5 OUT_Y_M (05-06h) 42
9.2.6 OUT_Z_M (07-08h) 42
9.2.7 SR_REG_M (09h) 42
9.2.8 IR_REG_M (0Ah/0Bh/0Ch) 43

电话：18923720150 邮箱：2355526548@qq.com

天猫店铺网址：https://telesky.tmall.com

10 Package information 45

11 Revision history 46

电话：18923720150 邮箱：2355526548@qq.com

天猫店铺网址：https://telesky.tmall.com

List of tables

Table 1. Device summary . . . 1
Table 2. Pin description . . . 10
Table 3. Mechanical characteristics . . . 11
Table 4. Electrical characteristics . . . 13
Table 5. I2C slave timing values . . . 14
Table 6. Absolute maximum ratings . . . 16
Table 7. Magnetic ST (positive bias) . . . 19
Table 8. Operational mode and power supply for magnetic field sensing . . . 21
Table 9. Serial interface pin description . . . 23
Table 10. Serial interface pin description . . . 23
Table 11. Transfer when master is writing one byte to slave . . . 24
Table 12. Transfer when master is writing multiple bytes to slave . . . 24
Table 13. Transfer when master is receiving (reading) one byte of data from slave . . . 24
Table 14. SAD+Read/Write patterns . . . 25
Table 15. Transfer when master is receiving (reading) multiple bytes of data from slave . . . 25
Table 16. SAD+Read/Write patterns . . . 26
Table 17. Register address map . . . 27
Table 18. CTRL_REG1_A register . . . 29
Table 19. CTRL_REG1_A description . . . 29
Table 20. Power mode and low-power output data rate configurations . . . 29
Table 21. Normal-mode output data rate configurations and low-pass cut-off frequencies . . . 30
Table 22. CTRL_REG2_A register . . . 30
Table 23. CTRL_REG2_A description . . . 30
Table 24. High-pass filter mode configuration . . . 31
Table 25. High-pass filter cut-off frequency configuration . . . 31
Table 26. CTRL_REG3_A register . . . 31
Table 27. CTRL_REG3_A description . . . 32
Table 28. Data signal on INT 1 and INT 2 pad . . . 32
Table 29. CTRL_REG4_A register . . . 32
Table 30. CTRL_REG4_A description . . . 32
Table 31. CTRL_REG5_A register . . . 33
Table 32. CTRL_REG5_A description . . . 33
Table 33. Sleep-to-wake configuration . . . 33
Table 34. REFERENCE_A register . . . 33
Table 35. REFERENCE_A description . . . 33
Table 36. STATUS_REG_A register . . . 34
Table 37. STATUS_REG_A description . . . 34
Table 38. INT1_CFG_A register . . . 35
Table 39. INT1_CFG_A description . . . 35
Table 40. Interrupt 1 source configurations . . . 35
Table 41. INT1_SRC register . . . 36
Table 42. INT1_SRC_A description . . . 36
Table 43. INT1_THS register . . . 36
Table 44. INT1_THS description . . . 36
Table 45. INT1_DURATION_A register . . . 36
Table 46. INT2_DURATION_A description . . . 36
Table 47. INT2_CFG_A register . . . 37
Table 48. INT2_CFG_A description . . . 37

电话：18923720150 邮箱：2355526548@qq.com

天猫店铺网址：https://telesky.tmall.com

Table 49. Interrupt mode configuration . . . 37
Table 50. INT2_SRC_A register . . . 38
Table 51. INT2_SRC_A description . . . 38
Table 52. INT2_THS register . . . 38
Table 53. INT2_THS description . . . 38
Table 54. INT2_DURATION_A register . . . 38
Table 55. INT2_DURATION_A description . . . 38
Table 56. CRA_REG_M register . . . 39
Table 57. CRA_REG_M description . . . 39
Table 58. CRA_REG M description . . . 39
Table 59. CRA_REG_M description . . . 40
Table 60. CRA_REG register . . . 40
Table 61. CRA_REG description . . . 40
Table 62. Gain setting . . . 40
Table 63. MR_REG . . . 41
Table 64. MR_REG description . . . 41
Table 65. Magnetic sensor operating mode . . . 41
Table 66. OUTXH_M register . . . 41
Table 67. OUTXL_M register . . . 42
Table 68. OUT_YH_M register . . . 42
Table 69. OUT_YL_M register . . . 42
Table 70. OUTZH_M register . . . 42
Table 71. OUTZL_M register . . . 42
Table 72. SR register . . . 43
Table 74. IRA_REG_M . . . 43
Table 75. IRB_REG_M . . . 43
Table 76. IRC_REG_M . . . 44
Table 77. Document revision history . . . 46

电话：18923720150 邮箱：2355526548@qq.com

天猫店铺网址：https://telesky.tmall.com

List of figures

Figure 1. Block diagram 8
Figure 2. Pin connection 9
Figure 3. I2C slave timing diagram 14
Figure 4. LSM303DLH electrical connection 1 - recommended for I2C fast mode 20
Figure 5. LSM303DLH electrical connection 2. 20
Figure 6. LGA-28: mechanical data and package dimensions 45

电话：18923720150 邮箱：2355526548@qq.com

天猫店铺网址：https://telesky.tmall.com

1 Block diagram and pin description

1.1 Block diagram

Figure 1. Block diagram

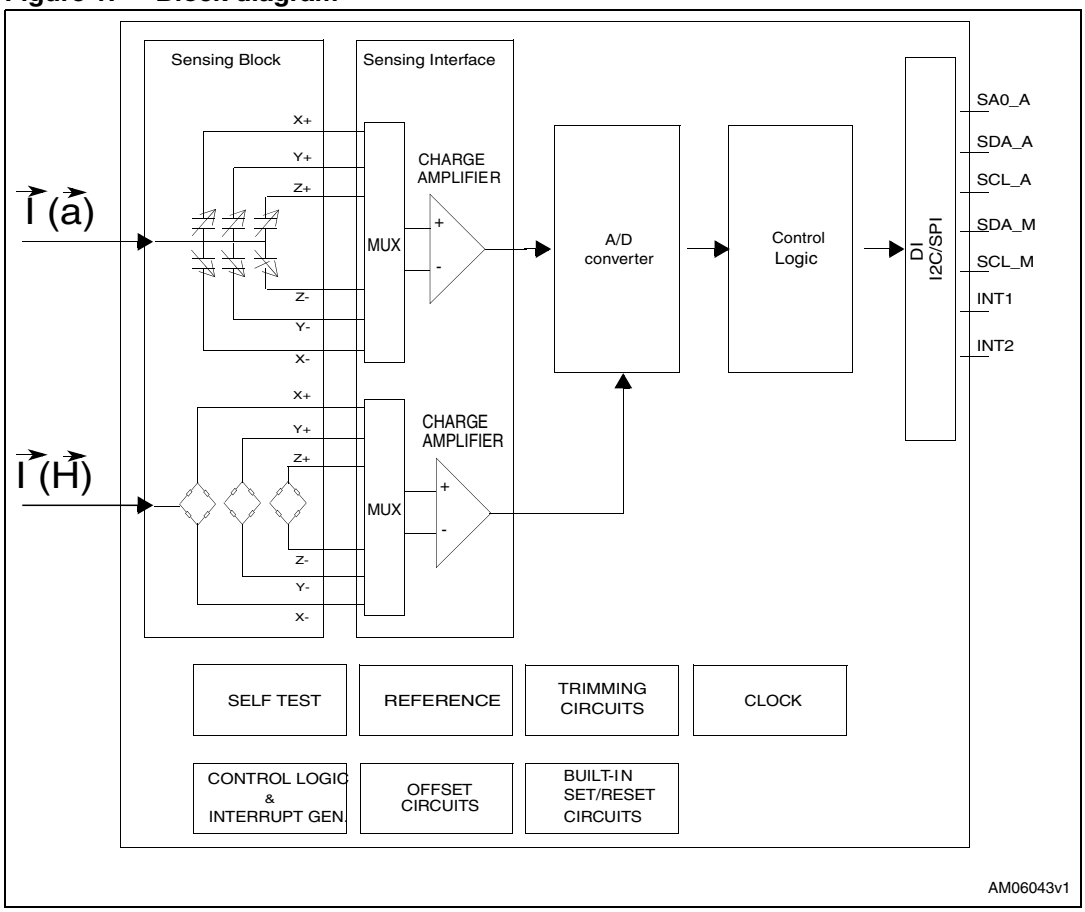

电话：18923720150 邮箱：2355526548@qq.com

天猫店铺网址：https://telesky.tmall.com

1.2 Pin description

Figure 2. Pin connection

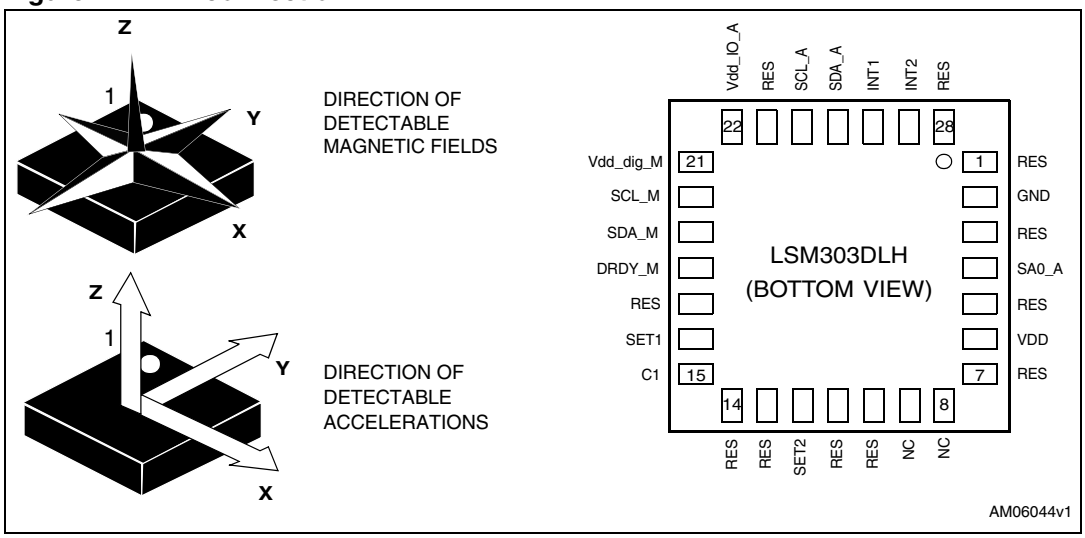

电话：18923720150 邮箱：2355526548@qq.com

天猫店铺网址：https://telesky.tmall.com

Table 2. Pin description

Pin#	Name	Function
1	Reserved	Connect to GND
2	GND	0 V supply
3	Reserved	Connect to GND
4	SA0_A	Linear acceleration signal I^2C less significant bit of the device address (SA0)
5	Reserved	To be connected to Vdd I^2C bus
6	Vdd	Power supply
7	Reserved	Connect to Vdd
8	NC	Not connected
9	NC	Not connected
10	Reserved	Leave unconnected
11	Reserved	Leave unconnected
12	SET2	S/R capacitor connection (C2)
13	Reserved	Leave unconnected
14	Reserved	Leave unconnected
15	C1	Reserved capacitor connection (C1)
16	SET1	S/R capacitor connection (C2)
17	Reserved	Connect to GND
18	DRDY_M	Magnetic signal interface data ready - test point
19	SDA_M	Magnetic signal interface I^2C serial data (SDA)
20	SCL_M	Magnetic signal interface I^2C serial clock (SCL)
21	Vdd_dig_M	Magnetic sensor digital power supply
22	Vdd_IO_A	Linear acceleration signal interface power supply for I/O pins
23	Reserved	Connect to Vdd_IO_A
24	SCL_A	Linear acceleration signal interface I^2C serial clock (SCL)
25	SDA_A	Linear acceleration signal interface I^2C serial data (SDA)
26	INT1	Inertial interrupt 1
27	INT2	Inertial interrupt 2
28	Reserved	Connect to GND

电话：18923720150 邮箱：2355526548@qq.com

天猫店铺网址：https://telesky.tmall.com

2 Module specifications

2.1 Mechanical characteristics

@ Vdd = 2.5 V, T = 25 °C unless otherwise noted[a]

Table 3. Mechanical characteristics

Symbol	Parameter	Test conditions	Min.	Typ.[1]	Max.	Unit
LA_FS	Linear acceleration measurement range[2]	FS bit set to 00		±2.0		g
		FS bit set to 01		±4.0		
		FS bit set to 11		±8.0		
M_FS	Magnetic measurement range	GN bits set to 001		±1.3		gauss
		GN bits set to 010		±1.9		
		GN bits set to 011		±2.5		
		GN bits set to 100		±4.0		
		GN bits set to 101		±4.7		
		GN bits set to 110		±5.6		
		GN bits set to 111		±8.1		
LA_So	Linear acceleration sensitivity	FS bit set to 00 12 bit representation	0.9	1	1.1	m*g*/digit
		FS bit set to 01 12 bit representation	1.8	2	2.2	
		FS bit set to 11 12 bit representation	3.5	3.9	4.3	
M_GN	Magnetic gain setting	GN bits set to 001 (X,Y)		1055		LSB/ gauss
		GN bits set to 001 (Z)		950		
		GN bits set to 010 (X,Y)		795		
		GN bits set to 010 (Z)		710		
		GN bits set to 011 (X,Y)		635		
		GN bits set to 011 (Z)		570		
		GN bits set to 100 (X,Y)		430		
		GN bits set to 100 (Z)		385		
		GN bits set to 101 (X,Y)		375		
		GN bits set to 101 (Z)		335		
		GN bits set to 110 (X,Y)		320		
		GN bits set to 110 (Z)		285		
		GN bits set to 111[2] (X,Y)		230		
		GN bits set to 111[2] (Z)		205		

a. The product is factory calibrated at 2.5 V. The operational power supply range is from 2.5 V to 3.3 V.

电话：18923720150 邮箱：2355526548@qq.com

天猫店铺网址：https://telesky.tmall.com

Table 3. Mechanical characteristics (continued)

Symbol	Parameter	Test conditions	Min.	Typ.(1)	Max.	Unit
LA_TCSo	Linear acceleration sensitivity change vs. temperature	FS bit set to 00		±0.01		%/°C
LA_TyOff	Linear acceleration typical zero-*g* level offset accuracy(3),(4)	FS bit set to 00		±20		m*g*
LA_TCOff	Linear acceleration zero-*g* level change vs temperature	Max delta from 25 °C		±0.1		m*g*/°C
LA_An	Acceleration noise density	FS bit set to 00		218		µ*g*/√Hz
LA_Vst	Linear acceleration self-test output change(5),(6),(7)	FS bit set to 00 X axis		300		LSb
		FS bit set to 00 Y axis		-300		LSb
		FS bit set to 00 Z axis		350		LSb
M_CAS	Magnetic cross-axis sensitivity	Cross field = 0.5 gauss Happlied = ±3 gauss		±1		%FS/ gauss
M_EF	Maximum exposed field	No permitting effect on zero reading			10000	gauss
M_ST	Magnetic self test	Positive bias mode, GN bits set to 100 on X, Y axis		270		LSB
		Positive bias mode, GN bits set to 100 on Z axis		255		LSB
M_R	Magnetic resolution	Vdd = 3 V		8		mgauss
M_DF	Disturbing field	Sensitivity starts to degrade. User S/R pulse to restore sensitivity			20	gauss
Top	Operating temperature range		-30		+85	°C

1. Typical specifications are not guaranteed
2. Verified by wafer level test and measurement of initial offset and sensitivity
3. Typical zero-*g* level offset value after MSL3 preconditioning
4. Offset can be eliminated by enabling the built-in high-pass filter
5. The sign of “Self-test output change” is defined by the CTRL_REG4 STsign bit (*Table 29*), for all axes.
6. Self-test output changes with the power supply. “Self-test output change” is defined as $OUTPUT[LSb]_{(CTRL_REG4\ ST\ bit=1)} - OUTPUT[LSb]_{(CTRL_REG4\ ST\ bit=0)}$. 1LSb=4*g*/4096 at 12bit representation, ±2 *g* full-scale
7. Output data reach 99% of final value after 1/ODR+1ms when enabling self-test mode, due to device filtering

电话：18923720150 邮箱：2355526548@qq.com

天猫店铺网址：https://telesky.tmall.com

2.2 Electrical characteristics

@ Vdd = 2.5 V, T = 25 °C unless otherwise noted.

Table 4. Electrical characteristics

Symbol	Parameter	Test conditions	Min.	Typ.(1)	Max.	Unit
Vdd	Supply voltage		2.5		3.3	V
Vdd_IO_A	Accelerometer module power supply for I/O		1.71	1.8	Vdd+0.1	V
Vdd_dig_M	Magnetic module digital power supply		1.71	1.8	2.0	V
Vdd I2C Bus	Magnetic module I^2C bus power supply		1.71	1.8	Vdd+0.1	V
Idd	Current consumption in normal mode(2)			0.83		mA
IddPdn	Current consumption in power-down mode	T = 25°C		3		µA
Top	Operating temperature range		-30		+85	°C

1. Typical specifications are not guaranteed.
2. Magnetic sensor setting ODR = 7.5 Hz. Accelerometer sensor ODR = 50 Hz.

电话：18923720150 邮箱：2355526548@qq.com

天猫店铺网址：https://telesky.tmall.com

2.3 Communication interface characteristics

2.3.1 Accelerometer sensor I²C - inter IC control interface

Subject to general operating conditions for Vdd and top.

Table 5. I²C slave timing values

Symbol	Parameter	I²C standard mode (1)		I²C fast mode (1)		Unit
		Min	Max	Min	Max	
$f_{(SCL)}$	SCL clock frequency	0	100	0	400	KHz
$t_{w(SCLL)}$	SCL clock low time	4.7		1.3		µs
$t_{w(SCLH)}$	SCL clock high time	4.0		0.6		µs
$t_{su(SDA)}$	SDA setup time	250		100		ns
$t_{h(SDA)}$	SDA data hold time	0.01	3.45	0.01	0.9	µs
$t_{r(SDA)}$ $t_{r(SCL)}$	SDA and SCL rise time		1000	$20 + 0.1C_b$ (2)	300	ns
$t_{f(SDA)}$ $t_{f(SCL)}$	SDA and SCL fall time		300	$20 + 0.1C_b$ (2)	300	ns
$t_{h(ST)}$	START condition hold time	4		0.6		µs
$t_{su(SR)}$	Repeated START condition setup time	4.7		0.6		µs
$t_{su(SP)}$	STOP condition setup time	4		0.6		µs
$t_{w(SP:SR)}$	Bus free time between STOP and START condition	4.7		1.3		µs

1. Data based on standard I²C protocol requirement, not tested in production.
2. Cb = total capacitance of one bus line, in pF.

Figure 3. I²C slave timing diagram (b)

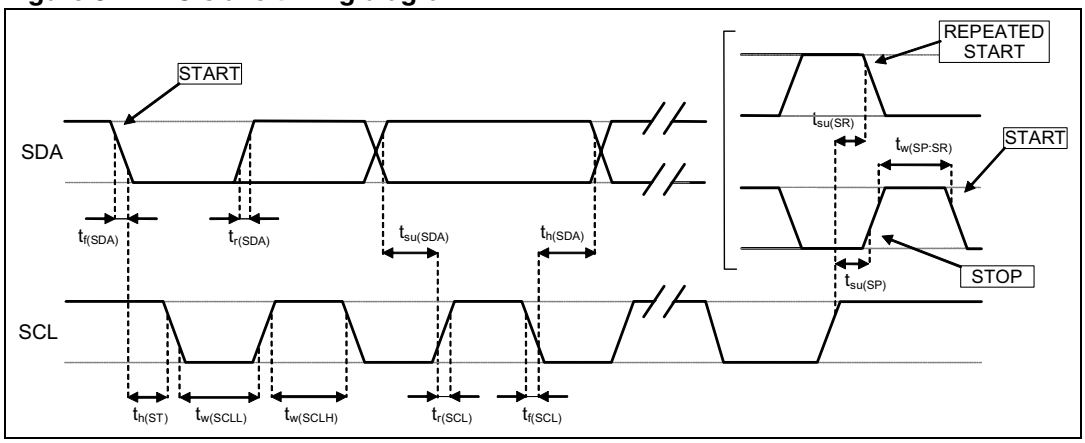

b. Measurement points are done at 0.2·Vdd_IO and 0.8·Vdd_IO, for both port.

电话：18923720150 邮箱：2355526548@qq.com

天猫店铺网址：https://telesky.tmall.com

2.3.2 Magnetic field sensing I^{2}C digital interface

This magnetic sensor IC has a 7-bit serial address and supports I^{2}C protocols with standard and fast modes (100 kHz and 400 kHz, respectively), but does not support high-speed mode (Hs).

External pull-up resistors are required to support the standard and fast modes. Depending on the application, the internal pull-ups may be used to support slower data speeds than specified by I^{2}C standards.

This device does not contain 50 ns spike suppression, as required by fast mode operation in the I^{2}C bus specification.

Activities required by the master (register read and write) have priority over internal activities, such as measurement. The purpose of this priority is to prevent the master waiting and the I^{2}C bus being engaged for longer than necessary.

电话：18923720150 邮箱：2355526548@qq.com

天猫店铺网址：https://telesky.tmall.com

3 Absolute maximum ratings

Stresses above those listed as “absolute maximum ratings” may cause permanent damage to the device. This is a stress rating only and functional operation of the device under these conditions is not implied. Exposure to maximum rating conditions for extended periods may affect device reliability.

Table 6. Absolute maximum ratings

Symbol	Ratings	Maximum value	Unit
Vin	Input voltage on any control pin (SCL, SDA)	-0.3 to Vdd_IO +0.3	V
A_{POW}	Acceleration (any axis, powered, Vdd = 2.5 V)	3,000 for 0.5 ms	*g*
		10,000 for 0.1 ms	*g*
A_{UNP}	Acceleration (any axis, unpowered)	3,000 for 0.5 ms	*g*
		10,000 for 0.1 ms	*g*
T_{OP}	Operating temperature range	-30 to +85	°C
T_{STG}	Storage temperature range	-40 to +125	°C

This is a mechanical shock sensitive device, improper handling can cause permanent damages to the part.

This is an ESD sensitive device, improper handling can cause permanent damages to the part.

电话：18923720150 邮箱：2355526548@qq.com

天猫店铺网址：https://telesky.tmall.com

4 Terminology

4.1 Linear acceleration sensitivity

Linear acceleration sensitivity describes the gain of the accelerometer sensor and can be determined e.g. by applying 1 *g* acceleration to it. Because the sensor can measure DC accelerations, this can be done easily by pointing the selected axis towards the ground, noting the output value, rotating the sensor 180 degrees (pointing towards the sky) and noting the output value again. By doing so, a ±1 g acceleration is applied to the sensor. Subtracting the larger output value from the smaller one, and dividing the result by 2, leads to the actual sensitivity of the sensor. This value changes very little over temperature and over time. The sensitivity tolerance describes the range of sensitivities of a large number of sensors.

4.2 Zero-*g* level

Zero-*g* level Offset (LA_TyOff) describes the deviation of an actual output signal from the ideal output signal if no linear acceleration is present. A sensor in a steady state on a horizontal surface will measure 0 g on both the X and Y axes, whereas the Z axis will measure 1 *g*. Ideally, the output is in the middle of the dynamic range of the sensor (content of OUT registers 00h, data expressed as 2's complement number). A deviation from the ideal value in this case is called Zero-*g* offset. Offset is to some extent a result of stress to the MEMS sensor and therefore the offset can slightly change after mounting the sensor onto a printed circuit board or exposing it to extensive mechanical stress. Offset changes little over temperature; see "Linear acceleration zero-*g* level change vs temperature" (LA_TCOff) in *Table 3.* The Zero-*g* level tolerance (TyOff) describes the standard deviation of the range of Zero-*g* levels of a group of sensors.

4.3 Sleep-to-wakeup

The "sleep-to-wakeup" function, in conjunction with low-power mode, allows further reduction of system power consumption and the development of new smart applications. The LSM303DLH may be set to a low-power operating mode, characterized by lower date rate refreshing. In this way the device, even if sleeping, continues sensing acceleration and generating interrupt requests.

When the sleep-to-wakeup function is activated, the LSM303DLH is able to automatically wake up as soon as the interrupt event has been detected, increasing the output data rate and bandwidth. With this feature the system may be efficiently switched from low-power mode to full-performance depending on user-selectable positioning and acceleration events, thus ensuring power-saving and flexibility.

电话：18923720150 邮箱：2355526548@qq.com

天猫店铺网址：https://telesky.tmall.com

5 Functionality

The LSM303DLH is a system-in-package featuring a 3D digital linear acceleration and 3D digital magnetic field detection sensor.

The system includes specific sensing elements and an IC interfaces capable of measuring both the linear acceleration and magnetic field applied to it, and to provide a signal to the external world through an I^2C serial interface with separated digital ouput.

The sensing system is manufactured using specialized micromachining processes, while the IC interfaces are realized using a CMOS technology that allows the design of a dedicated circuit which is trimmed to better match the sensing element characteristics.

The LSM303DLH features two data-ready signals (RDY) which indicate when a new set of measured acceleration data and magnetic data are available, thus simplifying data synchronization in the digital system that uses the device.

The LSM303DLH may also be configured to generate an inertial *wakeup* and *free-fall* interrupt signal according to a programmed acceleration event along the enabled axes. Both free-fall and wakeup can be used simultaneously on two different accelerometer interrupts.

5.1 Factory calibration

The IC interface is factory calibrated for linear acceleration sensitivity (LA_So), and linear acceleration Zero-*g* level (LA_TyOff).

The trimming values are stored inside the device in non-volatile memory. When the device is turned on, the trimming parameters are downloaded into the registers to be used during normal operation. This allows the use of the device without further calibration.

5.2 Linear acceleration self-test operation

Self-test allows the checking of sensor functionality without moving it. The self-test function is off when the self-test bit (ST) of CTRL_REG4_A (control register 4) is programmed to ‘0‘. When the self-test bit of CTRL_REG4_A is programmed to ‘1‘ an actuation force is applied to the sensor, simulating a definite input acceleration. In this case the sensor outputs will exhibit a change in their DC levels which are related to the selected full-scale through the device sensitivity. When self-test is activated, the device output level is given by the algebraic sum of the signals produced by the acceleration acting on the sensor and by the electrostatic test-force. If the output signals change within the amplitude specified in *Table 3*, then the sensor is working properly and the parameters of the interface chip are within the defined specifications.

5.3 Magnetic self-test operation

To check the magnetic sensor for proper operation, a self-test feature is incorporated in which the sensor offset straps are excited to create a nominal field strength (bias field) to be measured. To implement this self-test, the least significant bits (MS1 and MS0) of configuration register A are changed from 00 to 01 (0x12 or 0b000xxx01).

电话：18923720150 邮箱：2355526548@qq.com

天猫店铺网址：https://telesky.tmall.com

By placing the mode register into single-conversion mode (0x01), two data acquisition cycles are made on each magnetic vector.

The first acquisition is a set pulse followed shortly by measurement data of the external field. The second acquisition has the offset strap excited in the positive bias mode to create about a 0.6 *gauss* self-test field plus the external field. The first acquisition values are subtracted from the second acquisition, and the net measurement is placed into the data output registers.

To leave self-test mode, change the MS1 and MS0 bits of the configuration register A back to 0x00. Also, change the mode register if single-conversion mode is not the intended next mode of operation.

Table 7. Magnetic ST (positive bias)

Symbol	GN bits setting	Test axis	Min.	Typ.(1)	Max.	Unit
ST_M	GN bits set to 001	X,Y axis		655		LSB
		Z axis		630		
	GN bits set to 010	X,Y axis		495		
		Z axis		470		
	GN bits set to 011	X,Y axis		395		
		Z axis		375		
	GN bits set to 100	X,Y axis		270		
		Z axis		255		
	GN bits set to 101	X,Y axis		235		
		Z axis		225		
	GN bits set to 110	X,Y axis		200		
		Z axis		190		
	GN bits set to 111(2)	X,Y axis		140		
		Z axis		135		

1. Typical specifications are not guaranteed

电话：18923720150 邮箱：2355526548@qq.com

天猫店铺网址：https://telesky.tmall.com

6 Application hints

Figure 4. LSM303DLH electrical connection 1 - recommended for I²C fast mode

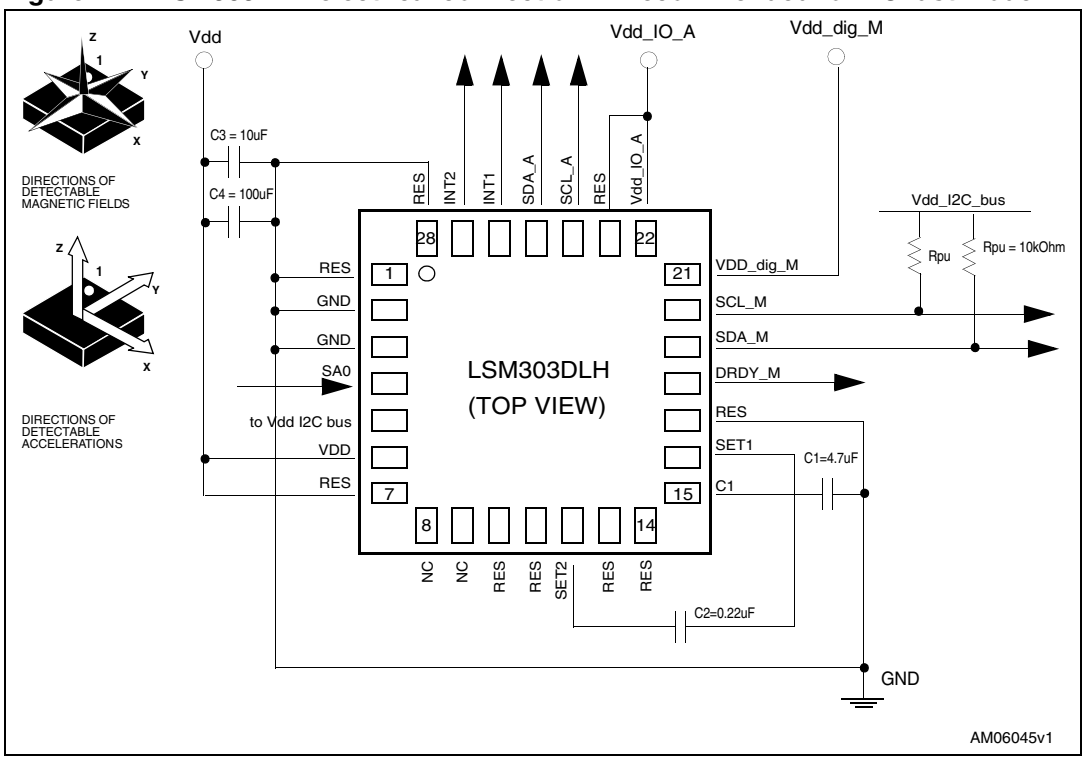

Figure 5. LSM303DLH electrical connection 2

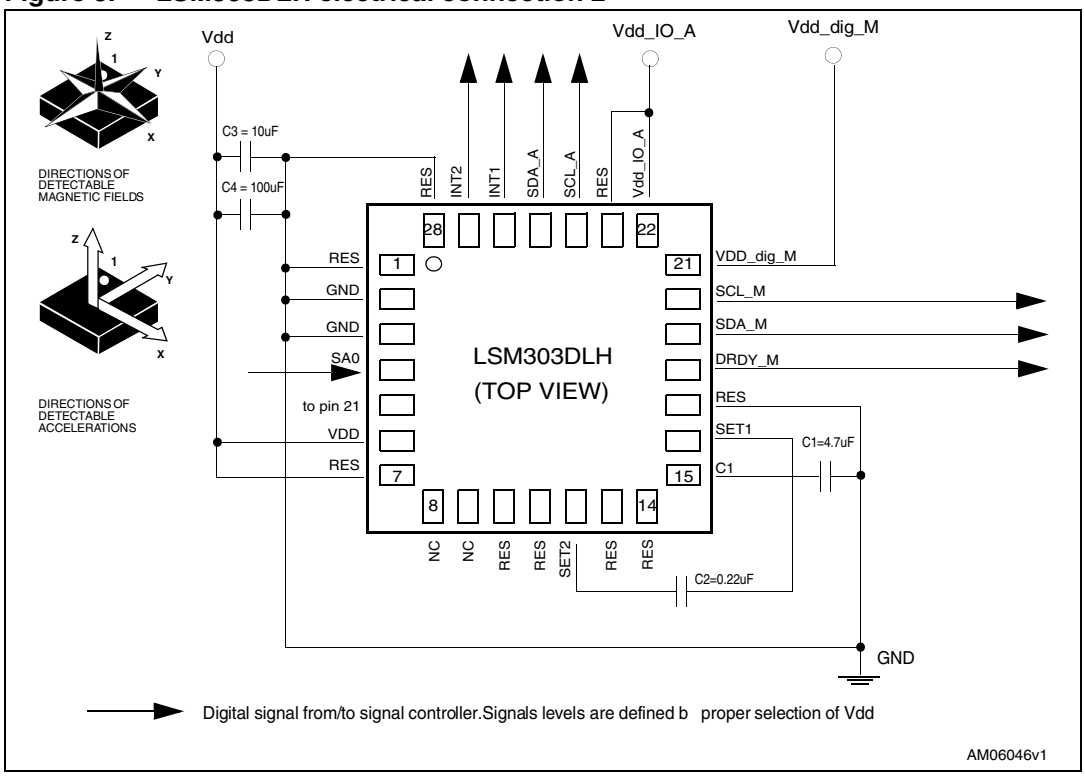

电话：18923720150 邮箱：2355526548@qq.com

天猫店铺网址：https://telesky.tmall.com

6.1 External capacitors

The C1 and C2 external capacitors should have a low SR value ceramic type construction. Reservoir capacitor C1 is nominally 4.7 µF in capacitance, with the set/reset capacitor C2 nominally 0.22 µF in capacitance.

The device core is supplied through the Vdd line. Power supply decoupling capacitors (C4=100 *nF* ceramic, C3=10 *µF* Al) should be placed as near as possible to the supply pin of the device (common design practice). All the voltage and ground supplies must be present at the same time to obtain proper behavior of the IC (refer to *Figure 4*).

The functionality of the device and the measured acceleration/magnetic field data is selectable and accessible through the I^2C interface.

The functions, the threshold and the timing of the two interrupt pins (INT 1 and INT 2) can be completely programmed by the user through the I^2C interface.

6.2 Pull-up resistors

Pull-up resistors are placed on the two I^2C bus lines.

6.3 Digital interface power supply

This digital interface dedicated to the linear acceleration signal is capable of operating with a standard power supply (Vdd) or using a dedicated power supply (Vdd_IO_A).

This digital interface dedicated to the magnetic field signal requires a dedicated power supply (Vdd_dig_M).

The table below shows the modes available in the various power supply conditions.

Table 8. Operational mode and power supply for magnetic field sensing

Vdd_dig_M	Vdd	Mode supported	Description
High	High	All except off	Digital I/O pins: range from GND to Vdd_I2C_bus / Vdd_dig_M. Device fully functional. Digital logic blocks are powered from Vdd_dig_M supply, including all onboard clocks.
High	Low	Power down	Digital I/O pins: range from GND to Vdd_I2C_bus / Vdd_dig_M. Device measurement functionality not supported. Device I^2C bus and register access supported.

6.4 Soldering information

The LGA package is compliant with the ECOPACK®, RoHS and “Green” standard.
It is qualified for soldering heat resistance according to JEDEC J-STD-020.

Leave “pin 1 Indicator” unconnected during soldering.

Land pattern and soldering recommendations are available at www.st.com/

电话：18923720150 邮箱：2355526548@qq.com

天猫店铺网址：https://telesky.tmall.com

6.5 High current wiring effects

High current in wiring and printed circuit traces can be the cause of errors in magnetic field measurements for compassing.

Conducto-generated magnetic fields add to earth's magnetic field, creating errors in compass heading computation.

Keep currents that are higher than 10 mA a few millimeters further away from the sensor IC.

电话：18923720150 邮箱：2355526548@qq.com

天猫店铺网址：https://telesky.tmall.com

7 Digital interfaces

The registers embedded inside the LSM303DLH are accessible through two separate I^2C serial interfaces: one for the accelerometer core and the other for the magnetometer core. The two interfaces can be connected together on the PCB.

Table 9. Serial interface pin description

Pin name	Pin description
SCL_A	I^2C serial clock (SCL) for accelerometer
SDA_A	I^2C serial data (SDA) for accelerometer
SCL_M	I^2C serial clock (SCL) for magnetometer
SDA_M	I^2C serial data (SDA) for magnetometer

7.1 I^2C serial interface

The LSM303DLH I^2C is a bus slave. The I^2C is employed to write the data into the registers whose content can also be read back.

The relevant I^2C terminology is given in the table below.

Table 10. Serial interface pin description

Term	Description
Transmitter	The device which sends data to the bus
Receiver	The device which receives data from the bus
Master	The device which initiates a transfer, generates clock signals and terminates a transfer
Slave	The device addressed by the master

There are two signals associated with the I^2C bus: the serial clock line (SCL) and the serial data line (SDA). The latter is a bidirectional line used for sending and receiving the data to/from the interface.

电话：18923720150 邮箱：2355526548@qq.com

天猫店铺网址：https://telesky.tmall.com

7.1.1 I²C operation

The transaction on the bus is started through a START (ST) signal. A START condition is defined as a HIGH to LOW transition on the data line while the SCL line is held HIGH. After this has been transmitted by the master, the bus is considered busy. The next byte of data transmitted after the start condition contains the address of the slave in the first 7 bits and the 8th bit tells whether the master is receiving data from the slave or transmitting data to the slave. When an address is sent, each device in the system compares the first seven bits after a start condition with its address. If they match, the device considers itself addressed by the master.

Data transfer with acknowledge is mandatory. The transmitter must release the SDA line during the acknowledge pulse. The receiver must then pull the data line LOW so that it remains stable low during the HIGH period of the acknowledge clock pulse. A receiver which has been addressed is obliged to generate an acknowledge after each byte of data received.

The I²C embedded inside the LSM303DLH behaves like a slave device and the following protocol must be adhered to. After the start condition (ST) a slave address is sent. Once a slave acknowledge (SAK) has been returned, an 8-bit sub-address (SUB) is transmitted: the 7 LSb represent the actual register address while the MSB enables address auto-increment. If the MSb of the SUB field is ‘1’, the SUB (register address) is automatically increased to allow multiple data read/write.

Table 11. Transfer when master is writing one byte to slave

Master	ST	SAD + W		SUB		DATA		SP
Slave			SAK		SAK		SAK	

Table 12. Transfer when master is writing multiple bytes to slave

Master	ST	SAD + W		SUB		DATA		DATA		SP
Slave			SAK		SAK		SAK		SAK	

Table 13. Transfer when master is receiving (reading) one byte of data from slave

Master	ST	SAD + W		SUB		SR	SAD + R			NMAK	SP
Slave			SAK		SAK			SAK	DATA		

Data are transmitted in byte format (DATA). Each data transfer contains 8 bits. The number of bytes transferred per transfer is unlimited. Data is transferred with the most significant bit (MSb) first. If a receiver cannot receive another complete byte of data until it has performed some other function, it can hold the clock line SCL LOW to force the transmitter into a wait state. Data transfer only continues when the receiver is ready for another byte and releases the data line. If a slave receiver does not acknowledge the slave address (i.e. it is not able to receive because it is performing a real-time function) the data line must be left HIGH by the slave. The master can then abort the transfer. A LOW to HIGH transition on the SDA line while the SCL line is HIGH is defined as a STOP condition. Each data transfer must be terminated by the generation of a STOP (SP) condition.

电话：18923720150 邮箱：2355526548@qq.com

天猫店铺网址：https://telesky.tmall.com

7.1.2 Linear acceleration digital interface

For linear acceleration, the default (factory) 7-bit slave address is 001100xb. The **SDO/SA0** pad can be used to modify the least significant bit of the device address. If the SA0 pad is connected to voltage supply, LSb is ‘1’ (address 0011001b) otherwise if the SA0 pad is connected to ground, LSb value is ‘0’ (address 0011000b). This solution permits connecting and addressing two different accelerometers to the same I^2C lines.

The slave address is completed with a read/write bit. If the bit was ‘1’ (read), a repeated START (SR) condition will have to be issued after the two sub-address bytes; if the bit is ‘0’ (write) the master transmits to the slave with direction unchanged. *Table 14* explains how the SAD+Read/Write bit pattern is composed, listing all the possible configurations.

Table 14. SAD+Read/Write patterns

Command	SAD[6:1]	SAD[0] = SA0	R/W	SAD+R/W
Read	001100	0	1	00110001 (31h)
Write	001100	0	0	00110000 (30h)
Read	001100	1	1	00110011 (33h)
Write	001100	1	0	00110010 (32h)

In order to read multiple bytes, it is necessary to assert the most significant bit of the sub-address field. In other words, SUB(7) must be equal to 1 while SUB(6-0) represents the address of the first register to be read.

In the presented communication format , MAK is Master Acknowledge and NMAK is No Master Acknowledge.

Table 15. Transfer when master is receiving (reading) multiple bytes of data from slave

Master	ST	SAD +W		SUB		SR	SAD +R			MAK		MAK		NMAK	SP
Slave			SAK		SAK			SAK	DATA		DATA		DATA		

7.1.3 Magnetic field digital interface

The system communicates via a two-wire I^2C bus system as a slave device. The interface protocol is defined by the I^2C bus specification. The data rate is the standard mode 100 kbps or 400 kbps rates as defined by the I^2C bus specifications. The bus bit format is an 8-bit data/address send and a 1-bit acknowledge bit. The format of the data bytes (payload) shall be case-sensitive ASCII characters or binary data to the magnetic sensor slave, and binary data returned. Negative binary values will be in two’s complement form.

For magnetic sensor, the default (factory) 7-bit slave address is 0011110b (0x3C) for write operations, or 00111101b (0x3D) for read operations.

The Serial Clock (SCL_M) and Serial Data (SDA_M) lines have optional internal pull-up resistors, but require resistive pull-up (Rp) between the master device (usually a host microprocessor) and the LSM303DLH. Pull-up resistance values of about 10 kΩ are recommended with a nominal 1.8 V digital supply voltage (Vdd_dig_M).

电话：18923720150 邮箱：2355526548@qq.com

天猫店铺网址：https://telesky.tmall.com

The SCL_M and SDA_M lines in this bus specification can be connected to a host of devices. The bus can be a single master to multiple slaves, or it can be a multiple master configuration. All data transfers are initiated by the master device which is responsible for generating the clock signal, and the data transfers are 8 bits long. All devices are addressed by the unique 7-bit address of the I^2C. After each 8-bit transfer, the master device generates a 9th clock pulse, and releases the SDA_M line.

The receiving device (addressed slave) pulls the SDA_M line low to acknowledge (ACK) the successful transfer, or leaves the SDA_M high to negative acknowledge (NACK). As per the I^2C specification, all transitions in the SDA_M line must occur when SCL_M is low. This requirement leads to two unique conditions on the bus associated with the SDA_M transitions when SCL_M is high. The master device pulling the SDA line low while the SCL_M line is high indicates the Start (S) condition, while the Stop (P) condition is indicated by the SDA_M line pulled high while the SCL_M line is high. The I^2C protocol also allows for the Restart condition, in which the master device issues a second start condition without issuing a stop.

All bus transactions begin with the master device issuing the start sequence followed by the slave address byte. The address byte contains the slave address; the upper 7 bits (bits7-1), and the least significant bit (LSb). The LSb of the address byte designates if the operation is a read (LSb=1) or a write (LSb=0). At the 9th clock pulse, the receiving slave device issues the ACK (or NACK). Following these bus events, the master sends data bytes for a write operation, or the slave clocks out data with a read operation. All bus transactions are terminated with the master issuing a stop sequence.

I^2C bus control can be implemented with either hardware logic or in software. Typical hardware designs release the SDA_M and SCL_M lines as appropriate to allow the slave device to manipulate these lines. In a software implementation, care must be taken to perform these tasks in code.

Table 16. SAD+Read/Write patterns

Command	SAD[6:0]	R/W	SAD+R/W
Read	0011110	1	00111101 (3Dh)
Write	0011110	0	00111100 (3Ch)

Magnetic signal interface reading/writing

The interface uses an address pointer to indicate which register location is to be read from or written to. These pointer locations are sent from the master to this slave device and succeed the 7-bit address plus 1 bit read/write identifier.

To minimize the communication between the master and magnetic digital interface of the LSM303DLH, the address pointer is updated automatically without master intervention.

This automatic address pointer update has two additional features. First, when address 12 or higher is accessed the pointer updates to address 00, and secondly when address 09 is reached, the pointer rolls back to address 03. Logically, the address pointer operation functions as shown below.

- if address pointer = 09, then address pointer = 03
- while if address pointer $\geq$12, then address pointer = 0
- while address pointer = address pointer + 1
- the address pointer value itself cannot be read via the I^2C bus.

Any attempt to read an invalid address location returns 0's, and any write to an invalid address location or an undefined bit within a valid address location is ignored by this device.

电话：18923720150 邮箱：2355526548@qq.com

天猫店铺网址：https://telesky.tmall.com

8 Register mapping

The tables given below provide a listing of the 8-bit registers embedded in the device and the related addresses:

Table 17. Register address map

Name	Slave address	Type	Register address		Default	Comment
			Hex	Binary		
Reserved (do not modify)			00 - 1F			Reserved
CTRL_REG1_A	TAB.13	rw	20	010 0000	00000111	
CTRL_REG2_A	TAB.13	rw	21	010 0001	00000000	
CTRL_REG3_A	TAB.13	rw	22	010 0010	00000000	
CTRL_REG4_A	TAB.13	rw	23	010 0011	00000000	
CTRL_REG5_A	TAB.13	rw	24	010 0100	00000000	
HP_FILTER_RESET_A	TAB.13	r	25	010 0101		Dummy register
REFERENCE_A	TAB.13	rw	26	010 0110	00000000	
STATUS_REG_A	TAB.13	r	27	010 0111	00000000	
OUT_X_L_A	TAB.13	r	28	010 1000	output	
OUT_X_H_A	TAB.13	r	29	010 1001	output	
OUT_Y_L_A	TAB.13	r	2A	010 1010	output	
OUT_Y_H_A	TAB.13	r	2B	010 1011	output	
OUT_Z_L_A	TAB.13	r	2C	010 1100	output	
OUT_Z_H_A	TAB.13	r	2D	010 1101	output	
Reserved (do not modify)			2E - 2F			Reserved
INT1_CFG_A	TAB.13	rw	30	011 0000	00000000	
INT1_SOURCE_A	TAB.13	r	31	011 0001	00000000	
INT1_THS_A	TAB.13	rw	32	011 0010	00000000	
INT1_DURATION_A	TAB.13	rw	33	011 0011	00000000	
INT2_CFG_A	TAB.13	rw	34	011 0100	00000000	
INT2_SOURCE_A	TAB.13	r	35	011 0101	00000000	
INT2_THS_A	TAB.13	rw	36	011 0110	00000000	
INT2_DURATION_A	TAB.13	rw	37	011 0111	00000000	
Reserved (do not modify)			38 - 3F			Reserved
CRA_REG_M	TAB.15	rw	00	00000000	00010000	
CRB_REG_M	TAB.15	rw	01	00000001	00100000	
MR_REG_M	TAB.15	rw	02	00000010	00000011	
OUT_X_H_M	TAB.15	r	03	00000011	output	

电话：18923720150 邮箱：2355526548@qq.com

天猫店铺网址：https://telesky.tmall.com

Table 17. Register address map (continued)

Name	Slave address	Type	Register address		Default	Comment
			Hex	Binary		
OUT_X_L_M	TAB.15	r	04	00000100	output	
OUT_Y_H_M	TAB.15	r	05	00000101	output	
OUT_Y_L_M	TAB.15	r	06	00000110	output	
OUT_Z_H_M	TAB.15	r	07	00000111	output	
OUT_Z_L_M	TAB.15	r	08	00001000	output	
SR_REG_Mg	TAB.15	r	09	00001001	00000000	
IRA_REG_M	TAB.15	r	0A	00001010	01001000	
IRB_REG_M	TAB.15	r	0B	00001011	00110100	
IRC_REG_M	TAB.15	r	0C	00001100	00110011	

Registers marked as *Reserved* must not be changed. Writing to these registers may cause permanent damage to the device.

The content of the registers that are loaded at boot should not be changed. They contain the factory calibrated values. Their content is automatically restored when the device is powered up.

电话：18923720150 邮箱：2355526548@qq.com

天猫店铺网址：https://telesky.tmall.com

9 Registers description

The device contains a set of registers which are used to control its behavior and to retrieve acceleration data. The register address, composed of 7 bits, is used to identify them and to write the data through the serial interface.

9.1 Linear acceleration register

For linear acceleration sensors, the default (factory) 7-bit slave address is 001100xb.

9.1.1 CTRL_REG1_A (20h)

Table 18. CTRL_REG1_A register

PM2	PM1	PM0	DR1	DR0	Zen	Yen	Xen

Table 19. CTRL_REG1_A description

PM2 - PM0	Power mode selection. Default value: 000 (000: Power-down; Others: refer to *Table 20*)
DR1, DR0	Data rate selection. Default value: 00 (00:50 Hz; others: refer to *Table 21*)
Zen	Z axis enable. Default value: 1 (0: Z axis disabled; 1: Z axis enabled)
Yen	Y axis enable. Default value: 1 (0: Y axis disabled; 1: Y axis enabled)
Xen	X axis enable. Default value: 1 (0: X axis disabled; 1: X axis enabled)

PM bits allow selection between power-down and two operating active modes. The device is in power-down mode when the PD bits are set to “000” (default value after boot). *Table 20* shows all the possible power mode configurations and respective output data rates. Output data in the low-power modes are computed with a low-pass filter cut-off frequency defined by DR1, DR0 bits.

DR bits, in the normal-mode operation, select the data rate at which acceleration samples are produced. In low-power mode they define the output data resolution. *Table 21* shows all the possible configurations for the DR1 and DR0 bits.

Table 20. Power mode and low-power output data rate configurations

PM2	PM1	PM0	Power mode selection	Output data rate [Hz] ODR_{LP}
0	0	0	Power-down	--
0	0	1	Normal mode	ODR

电话：18923720150 邮箱：2355526548@qq.com

天猫店铺网址：https://telesky.tmall.com

Table 20. Power mode and low-power output data rate configurations (continued)

PM2	PM1	PM0	Power mode selection	Output data rate [Hz] ODR_{LP}
0	1	0	Low-power	0.5
0	1	1	Low-power	1
1	0	0	Low-power	2
1	0	1	Low-power	5
1	1	0	Low-power	10

Table 21. Normal-mode output data rate configurations and low-pass cut-off frequencies

DR1	DR0	Output data rate [Hz] ODR	Low-pass filter cut-off frequency [Hz]
0	0	50	37
0	1	100	74
1	0	400	292
1	1	1000	780

9.1.2 CTRL_REG2_A (21h)

Table 22. CTRL_REG2_A register

BOOT	HPM1	HPM0	FDS	HPen2	HPen1	HPCF1	HPCF0

Table 23. CTRL_REG2_A description

BOOT	Reboot memory content. Default value: 0 (0: normal mode; 1: reboot memory content)
HPM1, HPM0	High-pass filter mode selection. Default value: 00 (00: normal mode; Others: refer to *Table 24*)
FDS	Filtered data selection. Default value: 0 (0: internal filter bypassed; 1: data from internal filter sent to output register)
HPen2	High-pass filter enabled for interrupt 2 source. Default value: 0 (0: filter bypassed; 1: filter enabled)
HPen1	High-pass filter enabled for interrupt 1 source. Default value: 0 (0: filter bypassed; 1: filter enabled)
HPCF1, HPCF0	High-pass filter cut-off frequency configuration. Default value: 00 (00: HPc=8; 01: HPc=16; 10: HPc=32; 11: HPc=64)

The **BOOT** bit is used to refresh the content of internal registers stored in the Flash memory block. At device power-up, the content of the Flash memory block is transferred to the

电话：18923720150 邮箱：2355526548@qq.com

天猫店铺网址：https://telesky.tmall.com

internal registers related to trimming functions to permit good device behavior. If, for any reason, the content of the trimming registers was changed, it is sufficient to use this bit to restore the correct values. When the BOOT bit is set to ‘1’ the content of internal Flash is copied to the corresponding internal registers and is used to calibrate the device. These values are factory-trimmed and are different for every accelerometer. They permit good device behavior and normally do not have to be modified. At the end of the boot process, the BOOT bit is again set to ‘0’.

Table 24. High-pass filter mode configuration

HPM1	HPM0	High-pass filter mode
0	0	Normal mode (reset reading HP_RESET_FILTER)
0	1	Reference signal for filtering
1	0	Normal mode (reset reading HP_RESET_FILTER)

HPCF[1:0]. These bits are used to configure the high-pass filter cut-off frequency f_t,which is given by:

$$f_t = \ln\left(1 - \frac{1}{HPc}\right) \cdot \frac{f_s}{2\pi}$$

The equation can be simplified to the following approximated equation:

$$f_t = \frac{f_s}{6 \cdot HPc}$$

Table 25. High-pass filter cut-off frequency configuration

HPcoeff2,1	f_t [Hz] Data rate = 50 Hz	f_t [Hz] Data rate = 100 Hz	f_t [Hz] Data rate = 400 Hz	f_t [Hz] Data rate = 1000 Hz
00	1	2	8	20
01	0.5	1	4	10
10	0.25	0.5	2	5
11	0.125	0.25	1	2.5

9.1.3 CTRL_REG3_A (22h)

Table 26. CTRL_REG3_A register

IHL	PP_OD	LIR2	I2_CFG1	I2_CFG0	LIR1	I1_CFG1	I1_CFG0

电话：18923720150 邮箱：2355526548@qq.com

天猫店铺网址：https://telesky.tmall.com

Table 27. CTRL_REG3_A description

IHL	Interrupt active high, low. Default value: 0 (0: active high; 1:active low)
PP_OD	Push-pull/open drain selection on interrupt pad. Default value 0. (0: push-pull; 1: open drain)
LIR2	Latch interrupt request on INT2_SRC register, with INT2_SRC register cleared by reading INT2_SRC itself. Default value: 0. (0: interrupt request not latched; 1: interrupt request latched)
I2_CFG1, I2_CFG0	Data signal on INT 2 pad control bits. Default value: 00. (see table below)
LIR1	Latch interrupt request on INT1_SRC register, with INT1_SRC register cleared by reading INT1_SRC register. Default value: 0. (0: interrupt request not latched; 1: interrupt request latched)
I1_CFG1, I1_CFG0	Data signal on INT 1 pad control bits. Default value: 00. (see table below)

Table 28. Data signal on INT 1 and INT 2 pad

I1(2)_CFG1	I1(2)_CFG0	INT 1(2) Pad
0	0	Interrupt 1 (2) source
0	1	Interrupt 1 source OR interrupt 2 source
1	0	Data ready
1	1	Boot running

9.1.4 CTRL_REG4_A (23h)

Table 29. CTRL_REG4_A register

BDU	BLE	FS1	FS0	STsign	0	ST	---

Table 30. CTRL_REG4_A description

BDU	Block data update. Default value: 0 (0: continuos update; 1: output registers not updated between MSB and LSB reading)
BLE	Big/little endian data selection. Default value 0. (0: data LSB @ lower address; 1: data MSB @ lower address)
FS1, FS0	Full-scale selection. Default value: 00. (00: ±2 *g*; 01: ±4 *g*; 11: ±8 *g*)
STsign	Self-test sign. Default value: 00. (0: self-test plus; 1 self-test minus)
ST	Self-test enable. Default value: 0. (0: self-test disabled; 1: self-test enabled)

电话：18923720150 邮箱：2355526548@qq.com

天猫店铺网址：https://telesky.tmall.com

The **BDU** bit is used to inhibit output register updates between the reading of the upper and lower register parts. In default mode (BDU = ‘0’), the lower and upper register parts are updated continuously. If it is not certain to read faster than output data rate, it is recommended to set BDU bit to ‘1’. In this way, after the reading of the lower (upper) register part, the content of that output register is not updated until the upper (lower) part is read also. This feature avoids reading LSB and MSB related to different samples.

9.1.5 CTRL_REG5_A (24h)

Table 31. CTRL_REG5_A register

0	0	0	0	0	0	TurnOn1	TurnOn0

Table 32. CTRL_REG5_A description

TurnOn1, TurnOn0	Turn-on mode selection for sleep-to-wake function. Default value: 00.

TurnOn bits are used for turning on the **sleep-to-wake** function.

Table 33. Sleep-to-wake configuration

TurnOn1	TurnOn0	Sleep-to-wake status
0	0	Sleep-to-wake function is disabled
1	1	Turned on: The device is in low-power mode (ODR is defined in CTRL_REG1_A)

By setting the TurnOn [1:0] bits to 11, the “sleep-to-wake” function is enabled. When an interrupt event occurs, the device goes into normal mode, increasing the ODR to the value defined in CTRL_REG1_A. Although the device is in normal mode, CTRL_REG1_A content is not automatically changed to “normal mode” configuration.

9.1.6 HP_FILTER_RESET_A (25h)

Dummy register. Reading at this address instantaneously zeroes the content of the internal high-pass filter. If the high-pass filter is enabled, all three axes are instantaneously set to 0 *g*. This makes it possible to surmount the settling time of the high-pass filter.

9.1.7 REFERENCE_A (26h)

Table 34. REFERENCE_A register

Ref7	Ref6	Ref5	Ref4	Ref3	Ref2	Ref1	Ref0

Table 35. REFERENCE_A description

Ref7 - Ref0	Reference value for high-pass filter. Default value: 00h.

电话：18923720150 邮箱：2355526548@qq.com

天猫店铺网址：https://telesky.tmall.com

This register sets the acceleration value taken as a reference for the high-pass filter output.

When the filter is turned on (at least one FDS, HPen2, or HPen1 bit is equal to ‘1’) and HPM bits are set to “01”, filter out is generated taking this value as a reference.

9.1.8 STATUS_REG_A(27h)

Table 36. STATUS_REG_A register

ZYXOR	ZOR	YOR	XOR	ZYXDA	ZDA	YDA	XDA

Table 37. STATUS_REG_A description

ZYXOR	X, Y and Z axis data overrun. Default value: 0 (0: no overrun has occurred; 1: new data has overwritten the previous one before it was read)
ZOR	Z axis data overrun. Default value: 0 (0: no overrun has occurred; 1: new data for the Z-axis has overwritten the previous one)
YOR	Y axis data overrun. Default value: 0 (0: no overrun has occurred; 1: new data for the Y-axis has overwritten the previous one)
XOR	X axis data overrun. Default value: 0 (0: no overrun has occurred; 1: new data for the X-axis has overwritten the previous one)
ZYXDA	X, Y and Z axis new data available. Default value: 0 (0: a new set of data is not yet available; 1: a new set of data is available)
ZDA	Z axis new data available. Default value: 0 (0: new data for the Z-axis is not yet available; 1: new data for the Z-axis is available)
YDA	Y axis new data available. Default value: 0 (0: new data for the Y-axis is not yet available; 1: new data for the Y-axis is available)
XDA	X axis new data available. Default value: 0 (0: new data for the X-axis is not yet available; 1: new data for the X-axis is available)

9.1.9 OUT_X_L_A (28h), OUT_X_H_A (29h)

X-axis acceleration data. The value is expressed as two’s complement.

9.1.10 OUT_Y_L_A (2Ah), OUT_Y_H_A (2Bh)

Y-axis acceleration data. The value is expressed as two’s complement.

9.1.11 OUT_Z_L_A (2Ch), OUT_Z_H_A (2Dh)

Z-axis acceleration data. The value is expressed as two’s complement.

电话：18923720150 邮箱：2355526548@qq.com

天猫店铺网址：https://telesky.tmall.com

9.1.12 INT1_CFG_A (30h)

Table 38. INT1_CFG_A register

AOI	6D	ZHIE	ZLIE	YHIE	YLIE	XHIE	XLIE

Table 39. INT1_CFG_A description

AOI	AND/OR combination of interrupt events. Default value: 0. (See *Table 40*)
6D	6 direction detection function enable. Default value: 0. (See *Table 40*)
ZHIE	Enable interrupt generation on Z high event. Default value: 0 (0: disable interrupt request; 1: enable interrupt request on measured accel. value higher than preset threshold)
ZLIE	Enable interrupt generation on Z low event. Default value: 0 (0: disable interrupt request; 1: enable interrupt request on measured accel. value lower than preset threshold)
YHIE	Enable interrupt generation on Y high event. Default value: 0 (0: disable interrupt request; 1: enable interrupt request on measured accel. value higher than preset threshold)
YLIE	Enable interrupt generation on Y low event. Default value: 0 (0: disable interrupt request; 1: enable interrupt request on measured accel. value lower than preset threshold)
XHIE	Enable interrupt generation on X high event. Default value: 0 (0: disable interrupt request; 1: enable interrupt request on measured accel. value higher than preset threshold)
XLIE	Enable interrupt generation on X low event. Default value: 0 (0: disable interrupt request; 1: enable interrupt request on measured accel. value lower than preset threshold)

Configuration register for Interrupt 1 source.

Table 40. Interrupt 1 source configurations

AOI	6D	Interrupt mode
0	0	OR combination of interrupt events
0	1	6 direction movement recognition
1	0	AND combination of interrupt events
1	1	6 direction position recognition

电话：18923720150 邮箱：2355526548@qq.com

天猫店铺网址：https://telesky.tmall.com

9.1.13 INT1_SRC_A (31h)

Table 41. INT1_SRC register

0	IA	ZH	ZL	YH	YL	XH	XL

Table 42. INT1_SRC_A description

IA	Interrupt active. Default value: 0 (0: no interrupt has been generated; 1: one or more interrupts have been generated)
ZH	Z high. Default value: 0 (0: no interrupt, 1: Z high event has occurred)
ZL	Z low. Default value: 0 (0: no interrupt; 1: Z low event has occurred)
YH	Y high. Default value: 0 (0: no interrupt, 1: Y high event has occurred)
YL	Y low. Default value: 0 (0: no interrupt, 1: Y low event has occurred)
XH	X high. Default value: 0 (0: no interrupt, 1: X high event has occurred)
XL	X low. Default value: 0 (0: no interrupt, 1: X low event has occurred)

Interrupt 1 source register. Read-only register.

Reading at this address clears INT1_SRC_A IA bit (and the interrupt signal on INT 1 pin) and allows the refreshing of data in the INT1_SRC_A register if the latched option was chosen.

9.1.14 INT1_THS_A (32h)

Table 43. INT1_THS register

0	THS6	THS5	THS4	THS3	THS2	THS1	THS0

Table 44. INT1_THS description

THS6 - THS0	Interrupt 1 threshold. Default value: 000 0000

9.1.15 INT1_DURATION_A (33h)

Table 45. INT1_DURATION_A register

0	D6	D5	D4	D3	D2	D1	D0

Table 46. INT2_DURATION_A description

D6 - D0	Duration value. Default value: 000 0000

电话：18923720150 邮箱：2355526548@qq.com

天猫店铺网址：https://telesky.tmall.com

The **D6 - D0** bits set the minimum duration of the Interrupt 2 event to be recognized. Duration steps and maximum values depend on the ODR chosen.

9.1.16 INT2_CFG_A (34h)

Table 47. INT2_CFG_A register

AOI	6D	ZHIE	ZLIE	YHIE	YLIE	XHIE	XLIE

Table 48. INT2_CFG_A description

AOI	AND/OR combination of interrupt events. Default value: 0. (See table below)
6D	6 direction detection function enable. Default value: 0. (See table below)
ZHIE	Enable interrupt generation on Z high event. Default value: 0 (0: disable interrupt request; 1: enable interrupt request on measured accel. value higher than preset threshold)
ZLIE	Enable interrupt generation on Z low event. Default value: 0 (0: disable interrupt request; 1: enable interrupt request on measured accel. value lower than preset threshold)
YHIE	Enable interrupt generation on Y high event. Default value: 0 (0: disable interrupt request; 1: enable interrupt request on measured accel. value higher than preset threshold)
YLIE	Enable interrupt generation on Y low event. Default value: 0 (0: disable interrupt request; 1: enable interrupt request on measured accel. value lower than preset threshold)
XHIE	Enable interrupt generation on X high event. Default value: 0 (0: disable interrupt request; 1: enable interrupt request on measured accel. value higher than preset threshold)
XLIE	Enable interrupt generation on X low event. Default value: 0 (0: disable interrupt request; 1: enable interrupt request on measured accel. value lower than preset threshold)

Configuration register for Interrupt 2 source.

Table 49. Interrupt mode configuration

AOI	6D	Interrupt mode
0	0	OR combination of interrupt events
0	1	6 direction movement recognition
1	0	AND combination of interrupt events
1	1	6 direction position recognition

电话：18923720150 邮箱：2355526548@qq.com

天猫店铺网址：https://telesky.tmall.com

9.1.17 INT2_SRC_A (35h)

Table 50. INT2_SRC_A register

0	IA	ZH	ZL	YH	YL	XH	XL

Table 51. INT2_SRC_A description

IA	Interrupt active. Default value: 0 (0: no interrupt has been generated; 1: one or more interrupts have been generated)
ZH	Z high. Default value: 0 (0: no interrupt, 1: Z high event has occurred)
ZL	Z low. Default value: 0 (0: no interrupt; 1: Z low event has occurred)
YH	Y high. Default value: 0 (0: no interrupt, 1: Y high event has occurred)
YL	Y low. Default value: 0 (0: no interrupt, 1: Y low event has occurred)
XH	X high. Default value: 0 (0: no interrupt, 1: X high event has occurred)
XL	X Low. Default value: 0 (0: no interrupt, 1: X low event has occurred)

Interrupt 2 source register. Read-only register.

Reading at this address clears INT2_SRC_A IA bit (and the interrupt signal on INT 2 pin) and allows the refreshing of data in the INT2_SRC_A register if the latched option was chosen.

9.1.18 INT2_THS_A (36h)

Table 52. INT2_THS register

0	THS6	THS5	THS4	THS3	THS2	THS1	THS0

Table 53. INT2_THS description

THS6 - THS0	Interrupt 1 threshold. Default value: 000 0000

9.1.19 INT2_DURATION_A (37h)

Table 54. INT2_DURATION_A register

0	D6	D5	D4	D3	D2	D1	D0

Table 55. INT2_DURATION_A description

D6 - D0	Duration value. Default value: 000 0000

电话：18923720150 邮箱：2355526548@qq.com

天猫店铺网址：https://telesky.tmall.com

The **D6 - D0** bits set the minimum duration of the Interrupt 2 event to be recognized. Duration time steps and maximum values depend on the ODR chosen.

9.2 Magnetic field sensing register description

The magnetometer core contains a set of registers which are used to control its behavior and to retrieve magnetic field data. The register's address, composed of 8 bits, is used to identify them and to read/write the data through the serial interface.

For magnetic field sensing interface, the default (factory) 7-bit slave address is 00111100b (0x3C) for write operations, or 00111101b (0x3D) for read operations.

9.2.1 CRA_REG_M (00h)

The configuration register A is used to configure the device for setting the data output rate and measurement configuration. CRA0 through CRA7 indicate bit locations, with *CRA* denoting the bits that are in the configuration register. CRA7 denotes the first bit of the data stream. The number in parentheses indicates the default value of that bit.

Table 56. CRA_REG_M register

0	0	0	DO2	DO1	DO0	MS1	MS0

Table 57. CRA_REG_M description

CRA7 to CRA5	These bits must be cleared for correct operation.
DO2 to DO0	Data output rate bits. These bits set the rate at which data is written to all three data output registers
MS1 to MS0	Measurement configuration bits. These bits define the measurement flow of the device, specifically whether or not to incorporate an applied bias to the sensor into the measurement

Table 58. CRA_REG M description

DO2	DO1	DO0	Minimum data output rate (Hz)
0	0	0	0.75
0	0	1	1.5
0	1	0	3.0
0	1	1	7.5
1	0	0	15
1	0	1	30
1	1	0	75
1	1	1	Not used

电话：18923720150 邮箱：2355526548@qq.com

天猫店铺网址：https://telesky.tmall.com

Table 59. CRA_REG_M description

MS1	MS0	Magnetic sensor operating mode
0	0	Normal measurement configuration (default). In normal measurement configuration the device follows normal measurement flow.
0	1	Positive bias configuration.
1	0	Negative bias configuration.
1	1	This configuration is not used

9.2.2 CRB_REG_M (01h)

The configuration register B for setting the device gain. CRB0 through CRB7 indicate bit locations, with *CRB* denoting the bits that are in the configuration register. CRB7 denotes the first bit of the data stream. The number in parentheses indicates the default value of that bit.

Table 60. CRA_REG register

GN2	GN1	GN0	0	0	0	0	0

Table 61. CRA_REG description

CRB7 to CRB5	Gain configuration bits. These bits configure the gain for the device. The gain configuration is common for all channels
CRB7 to CRB5	This bit must be cleared for correct operation

Table 62. Gain setting

GN2	GN1	GN0	Sensor input field range [Gauss]	Gain X/Y and Z [LSB/Gauss]	Gain Z [LSB/Gauss]	Output range
0	0	1	±1.3	1055	950	0xF800–0x07FF (-2048–2047)
0	1	0	±1.9	795	710	
0	1	1	±2.5	635	570	
1	0	0	±4.0	430	385	
1	0	1	±4.7	375	335	
1	1	0	±5.6	320	285	
1	1	1	±8.1	230	205	

9.2.3 MR_REG_M (02h)

The mode register is an 8-bit register from which data can be read or to which data can be written. This register is used to select the operating mode of the device. MR0 through MR7 indicate bit locations, with *MR* denoting the bits that are in the mode register. MR7 denotes

电话：18923720150 邮箱：2355526548@qq.com

天猫店铺网址：https://telesky.tmall.com

the first bit of the data stream. The number in parentheses indicates the default value of that bit.

Table 63. MR_REG

0	0	0	0	0	0	MD1	MD0

Table 64. MR_REG description

MR7 to MR2	These bits must be cleared for correct operation
MR1 to MR0	Mode select bits. These bits select the operation mode of this device.

Table 65. Magnetic sensor operating mode

MD1	MD0	Mode
0	0	Continuous-conversion mode: the device continuously performs conversions and places the result in the data register. RDY goes high when new data is placed in all three registers. After a power-on or a write to the mode or configuration register, the first measurement set is available from all three data output registers after a period of 2/fDO, and subsequent measurements are available at a frequency of fDO, where fDO is the frequency of data output.
0	1	Single-conversion mode: the device performs a single measurement, sets RDY high and returns to sleep mode. Mode register returns to sleep mode bit values. The measurement remains in the data output register and RDY remains high until the data output register is read or another conversion is performed.
1	0	--
1	1	Sleep mode. Device is placed in sleep mode

9.2.4 OUT_X_M (03-04h)

The data output X registers are two 8-bit registers, data output register H and data output register L. These registers store the measurement result from channel X.

Data output X register H contains the MSB from the measurement result, and data output X register L contains the LSB from the measurement result.

The value stored in these two registers is a 16-bit value in 2's complement form, whose range is 0xF800 to 0x07FF. DXRH0 through DXRH7 and DXRL0 through DXRL7 indicate bit locations, with DXRH and DXRL denoting the bits that are in the data output X registers. DXRH7 and DXRL7 denote the first bit of the data stream.

In the event the ADC reading overflows or underflows for the given channel, or if there is a math overflow during the bias measurement, this data register will contain the value -4096 in 2's complement form. This register value clears after the next valid measurement is made.

Table 66. OUTXH_M register

DXRH7	DXRH6	DXRH5	DXRH4	DXRH3	DXRH2	DXRH1	DXRH0

The content of this register is the MSB magnetic field data for X-axis.

电话：18923720150 邮箱：2355526548@qq.com

天猫店铺网址：https://telesky.tmall.com

Table 67. OUTXL_M register

DXRL7	DXRL6	DXRL5	DXRL4	DXRL3	DXRL2	DXRL1	DXRL0

The content of this register is the LSB magnetic field data for X-axis.

9.2.5 OUT_Y_M (05-06h)

The data output Y registers are two 8-bit registers, data output register H and data output register L. These registers store the measurement result from channel Y.

Data output Y register H contains the MSB from the measurement result, and data output Y register L contains the LSB from the measurement result.

Table 68. OUT_YH_M register

DYRH7	DYRH6	DYRH5	DYRH4	DYRH3	DYRH2	DYRH1	DYRH0

The content of this register is the MSB magnetic field data for Y-axis.

Table 69. OUT_YL_M register

DYRL7	DYRL6	DYRL5	DYRL4	DYRL3	DYRL2	DYRL1	DYRL0

The content of this register is the LSB magnetic field data for Y-axis.

9.2.6 OUT_Z_M (07-08h)

The data output Z registers are two 8-bit registers, data output register H and data output register L. These registers store the measurement result from channel Z.

Data output Z register H contains the MSB from the measurement result, and data output Z register L contains the LSB from the measurement result.

Table 70. OUTZH_M register

DZRH7	DZRH6	DZRH5	DZRH4	DZRH3	DZRH2	DZRH1	DZRH0

The content of this register is the MSB magnetic field data for Z-axis.

Table 71. OUTZL_M register

DZRL7	DZRL6	DZRL5	DZRL4	DZRL3	DZRL2	DZRL1	DZRL0

The content of this register is the LSB magnetic field data for Z-axis.

9.2.7 SR_REG_M (09h)

When one or more of the output registers are read, new data cannot be placed in any of the output data registers until all six data output registers are read. This requirement also

电话：18923720150 邮箱：2355526548@qq.com

天猫店铺网址：https://telesky.tmall.com

impacts DRDY and RDY, which cannot be cleared until new data is placed in all the output registers.

Status register

The status register (SR) is an 8-bit read-only register. This register is used to indicate device status. SR0 through SR7 indicate bit locations, with *SR* denoting the bits that are in the status register. SR7 denotes the first bit of the data stream.

Table 72. SR register

0	0	0	0	0	REN	LOC	RDY

Table 73. Status register bit designations

MD1	MD0	Mode
SR7 to SR3	0	These bits must be cleared for correct operation
SR2	REN	Regulator enabled bit. This bit is set when the internal voltage regulator is enabled. This bit is cleared when the internal regulator is disabled.
SR1	LOCK	Data output register lock. This bit is set when some, but not all, of the six data output registers have been read. When this bit is set, the six data output registers are locked and any new data is not placed in these registers until one of four conditions are met: one, all six have been read or the mode changed, two, a POR is issued, three, the mode is changed, or four, the measurement is changed.
SR0	RDY	Ready bit. Set when data is written to all six data registers. Cleared when the device initiates a write to the data output registers, when in off mode, and after one or more of the data output registers are written to. When RDY bit is clear, it shall remain cleared for a minimum of 5 µs. The DRDY pin can be used as an alternative to the status register for monitoring the device for conversion data.

9.2.8 IR_REG_M (0Ah/0Bh/0Ch)

The identification registers (IR) are used to identify the device. IR0 through IR7 indicate bit locations, with IRA/IRB/IRC denoting the bits that are in the identification registers A, B & C. IRA7/IRB7/IRC7 denotes the first bit of the data stream.

The identification value for this device is stored in this register. This is a read-only register.

Register values. ASCII value *H*

Table 74. IRA_REG_M

0	1	0	0	1	0	0	0

Table 75. IRB_REG_M

0	0	1	1	0	1	0	0

电话：18923720150 邮箱：2355526548@qq.com

天猫店铺网址：https://telesky.tmall.com

Table 76. IRC_REG_M

0	0	1	1	0	0	1	1

电话：18923720150 邮箱：2355526548@qq.com

天猫店铺网址：https://telesky.tmall.com

10 Package information

In order to meet environmental requirements, ST offers these devices in different grades of ECOPACK® packages, depending on their level of environmental compliance. ECOPACK® specifications, grade definitions and product status are available at: www.st.com. ECOPACK is an ST trademark.

Figure 6. LGA-28: mechanical data and package dimensions

Dimensions			
Ref.	mm		
	Min.	Typ.	Max.
A1			1
A2		0.785	
A3		0.200	
D1	4.850	5.000	5.150
E1	4.850	5.000	5.150
L1		1.650	
L2		3.300	
N1		0.550	
M	0.040	0.100	0.160
T1	0.260	0.300	0.340
T2	0.360	0.400	0.440
d		0.200	
k		0.050	
h		0.100	

Outline and mechanical data

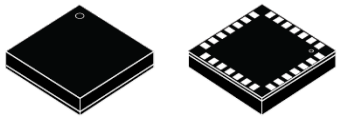

LGA-28 (5x5x1)
Land Grid Array Packages

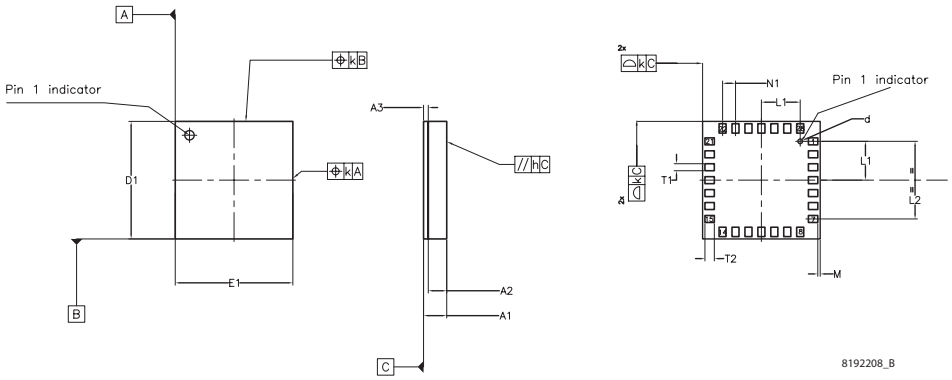

电话：18923720150 邮箱：2355526548@qq.com

天猫店铺网址：https://telesky.tmall.com

11 Revision history

Table 77. Document revision history

Date	Revision	Changes
18-Dec-2009	1	First issue.

电话：18923720150 邮箱：2355526548@qq.com

天猫店铺网址：https://telesky.tmall.com

电话：18923720150 邮箱：2355526548@qq.com