天猫店铺网址：https://telesky.tmall.com

AN3192
Application note

Using LSM303DLH for a tilt compensated electronic compass

Introduction

This application note describes the method for building a tilt compensated electronic compass using an LSM303DLH sensor module.

The LSM303DLH is a 5 x 5 x 1 mm with LGA-28L package IC chip that includes a 3D digital linear acceleration and a 3D digital magnetic sensor. It has a selectable linear acceleration full scale range of ±2g / ±4g / ±8g and a selectable magnetic field full scale range of ±1.3 / ±1.9 / ±2.5 / ±4.0 / ±4.7 / ±5.6 / ±8.1 gauss. Both the magnetic sensor and the accelerometer parts can be powered down separately to reduce power consumption. Sensor measurements can be acquired by a microcontroller through an I^2C serial bus interface.

The key features of the system are:

- One single chip solution
- I^2C communication interface
- Tilt compensation

Section 1 describes the basics of the electronic compass. *Section 2* presents a typical hardware connection between the LSM303DLH and a microcontroller and sample code for sensor data acquisition. *Section 3* focuses on the methods of the determination of sensor calibration parameters. *Section 4* shows the methods of lab testing and field testing for checking the electronic compass performance. *Section 5* gives recommendations for microcontroller firmware implementation when designing a standalone tilt compensated electronic compass.

电话：18923720150 邮箱：2355526548@qq.com

天猫店铺网址：https://telesky.tmall.com

Contents

1 Electronic compass basics 5

1.1 Definitions 5

1.2 Heading calculation 6

1.3 Tilt compensation 6

1.4 Electronic compass system 7

1.5 Getting started with LSM303DLH 8

2 LSM303DLH configuration 9

2.1 Typical hardware connection 9

2.2 LSM303DLH accelerometer data acquisition 9

2.3 LSM303DLH magnetic sensor data acquisition 10

3 Calibrating the LSM303DLH 12

3.1 LSM303DLH accelerometer calibration 12

3.2 LSM303DLH magnetic sensor calibration 12

3.2.1 Terminology 13

4 Testing the electronic compass 15

4.1 Lab testing 15

4.1.1 Absolute heading testing 15

4.1.2 Tilt compensation testing 16

4.2 Field testing 16

4.2.1 Relative heading testing 17

4.2.2 Tilt compensation testing 17

5 Firmware implementation 18

Appendix A LSM303DLH pitch/roll/heading calculation 19

A.1 Pitch/roll calculation. 20

A.2 Heading calculation. 22

Appendix B Accelerometer calibration method. 24

电话：18923720150 邮箱：2355526548@qq.com

天猫店铺网址：https://telesky.tmall.com

Appendix C Magnetic sensor calibration method 27

C.1 Step 1: Soft-iron effect verification 27

C.2 Step 2: Hard-iron, soft-iron and scale factor compensation 27

C.3 Step 3: Misalignment error compensation. 30

6 References 32

7 Revision history 33

电话：18923720150 邮箱：2355526548@qq.com

天猫店铺网址：https://telesky.tmall.com

List of figures

Figure 1. Body coordinates and attitude angles 5
Figure 2. Heading calculation 6
Figure 3. Handheld device at tilted position 7
Figure 4. Block diagram of electronic compass system 7
Figure 5. Typical hardware connection 9
Figure 6. Lab testing setup 15
Figure 7. Field testing setup 16
Figure 8. Electronic compass coordinate system 19
Figure 9. Rotation procedures 20
Figure 10. Heading calculation 22
Figure 11. 3D rotations plus three 2D full round rotations 27
Figure 12. After hard-iron, soft-iron, and scale factor compensation 28
Figure 13. After misalignment compensation 31

电话：18923720150 邮箱：2355526548@qq.com

天猫店铺网址：https://telesky.tmall.com

1 Electronic compass basics

The strength of the earth's magnetic field is about 0.5 to 0.6 gauss and has a component parallel to the earth's surface that always points toward the magnetic north pole. In the northern hemisphere, this field points down. At the equator, it points horizontally and in the southern hemisphere, it points up. This angle between the earth's magnetic field and the horizontal plane is defined as an inclination angle. Another angle between the earth's magnetic north and geographic north is defined as a declination angle in the range of ± 20º depending on the geographic location.

A tilt compensated electronic compass system requires a 3-axis magnetic sensor and a 3-axis accelerometer sensor. The accelerometer is used to measure the tilt angles of pitch and roll for tilt compensation. And the magnetic sensor is used to measure the earth's magnetic field and then to determine the heading angle with respect to the magnetic north. If the heading with respect to the geographic north is required, the declination angle at the current geographic location should be compensated to the magnetic heading.

1.1 Definitions

For compass applications in a handheld device such as a cell phone or a PDA, the aircraft convention is widely used to define the device body coordinates and three attitude angles pitch, roll and heading as shown in *Figure 1*.

Figure 1. Body coordinates and attitude angles

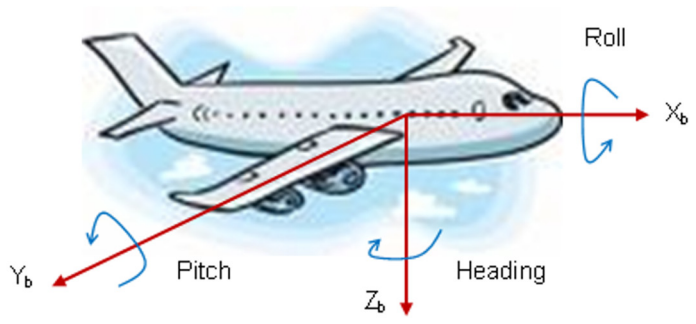

From *Figure 1*, the device (or aircraft) body coordinates $X_b/Y_b/Z_b$ are defined as forward/right/down based on the right-hand rule.

Three attitude angles are referenced to the local horizontal plane which is perpendicular to earth's gravity.

Heading is defined as the angle between the X_b axis and the magnetic north on the horizontal plane measured in a clockwise direction when viewing from the top of the device (or aircraft).

Pitch is defined as the angle between the X_b axis and the horizontal plane. When rotating the device around the Y_b axis with the X_b axis moving upwards, pitch is positive and increasing.

Roll is defined as the angle between the Yb axis and the horizontal plane. When rotating the device around the X_b axis with the Y_b axis moving downwards, roll is positive and increasing.

电话：18923720150 邮箱：2355526548@qq.com

天猫店铺网址：https://telesky.tmall.com

1.2 Heading calculation

When the device is at a leveled position, pitch and roll angles are 0°. Then the heading angle can be determined as shown in *Figure 2*.

Figure 2. Heading calculation

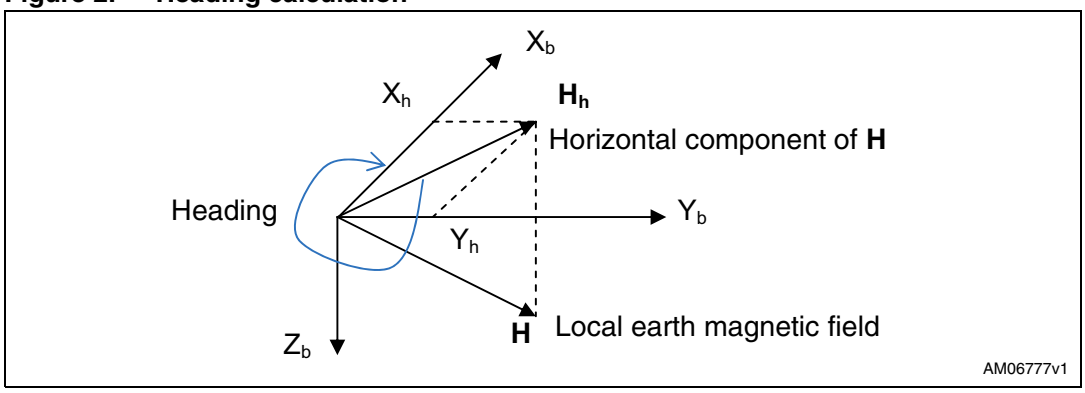

Local earth magnetic field H has a fixed component H_h on the horizontal plane pointing to the earth's magnetic north. This component can be measured by the magnetic sensor sensing axes X_M and Y_M that are named as X_h and Y_h. Then the heading angle is calculated as:

Equation 1

$$\text{Heading} = \arctan(Y_h / X_h)$$

In *Figure 2*, when the device body X_b axis is parallel to H_h which is pointing to the magnetic north, then X_h = max and Y_h = 0 so that heading = 0°. Rotating the device clockwise on the horizontal plane, the heading increases. When X_h = 0 and Y_h = min, then heading = 90°. Keep rotating until X_h = min and Y_h = 0, then heading = 180°. And so on. After a full round 360° rotation, the user sees a centered circle if plotting X_h and Y_h values coming from the magnetic sensor measurements.

1.3 Tilt compensation

If the handheld device is tilted, then the pitch and roll angles are not equal to 0° as shown in *Figure 3*, where the pitch and roll can be measured by a 3-axis accelerometer. Therefore, the magnetic sensor measurements X_M, Y_M, and Z_M need to be compensated to obtain X_h and Y_h as shown in *Equation 2*. And then apply *Equation 1* for the heading calculation.

电话：18923720150 邮箱：2355526548@qq.com

天猫店铺网址：https://telesky.tmall.com

Figure 3. Handheld device at tilted position

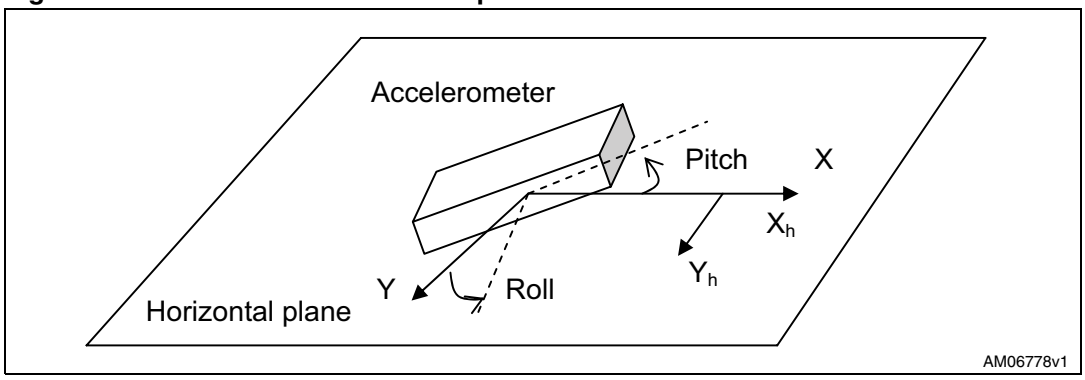

Equation 2

$$X_h = X_M \cos Pitch + Z_M \sin Pitch$$
$$Y_h = X_M \sin Roll \sin Pitch + Y_M \cos Roll - Z_M \sin Roll \cos Pitch$$

Where, X_M, Y_M, and Z_M are magnetic sensor measurements.

1.4 Electronic compass system

Figure 4 below shows the block diagram of an electronic compass system. A microcontroller (MCU) is used to collect the 3-axis accelerometer raw data for the pitch and roll calculation and collect the 3-axis magnetic sensor raw data for the heading calculation. The following is the procedure for building a working electronic compass system.

- Hardware design to make sure the MCU can get clean raw data from the accelerometer and the magnetic sensor
- Accelerometer calibration to obtain parameters to convert accelerometer raw data to normalized values for pitch and roll calculation
- Magnetic sensor calibration to obtain parameters to convert magnetic sensor raw data to normalized values for the heading calculation
- Test the performance of the electronic compass system.

Figure 4. Block diagram of electronic compass system

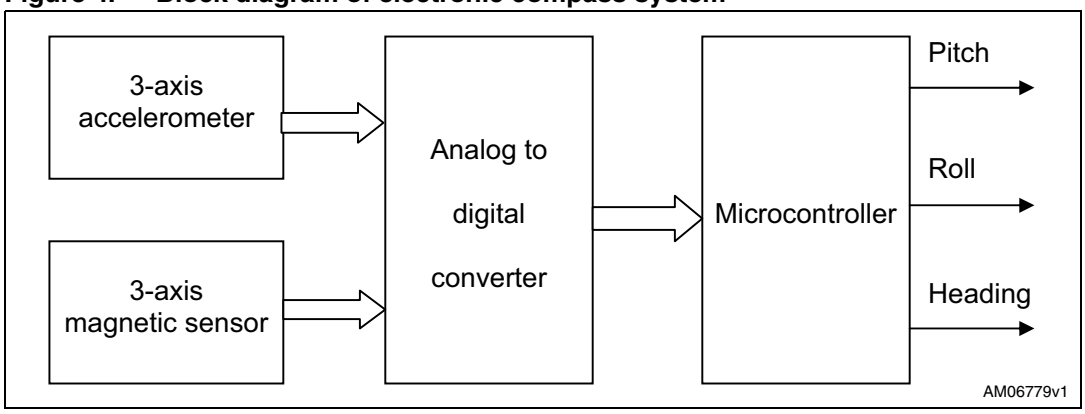

电话：18923720150 邮箱：2355526548@qq.com

天猫店铺网址：https://telesky.tmall.com

1.5 Getting started with LSM303DLH

The LSM303DLH from STMicroelectronics is a 6D sensor module that contains a 3D accelerometer and a 3D magnetic sensor. It has an I^2C digital interface so that the analog to digital converter is avoided. The MCU can collect 6D sensor data directly through the I^2C interface.

After understanding the electronic compass basics, it is time to get started on building a working electronic compass system based on the LSM303DLH 6D sensor module. The detailed definition and pitch/roll/heading calculation are described in *Appendix A*.

电话：18923720150 邮箱：2355526548@qq.com

天猫店铺网址：https://telesky.tmall.com

2 LSM303DLH configuration

2.1 Typical hardware connection

Figure 5 shows a typical hardware connection between the LSM303DLH and a microcontroller. The +3 V power supply is used to power the LSM303DLH and the +1.8 V power supply is used for digital IO lines.

Figure 5. Typical hardware connection

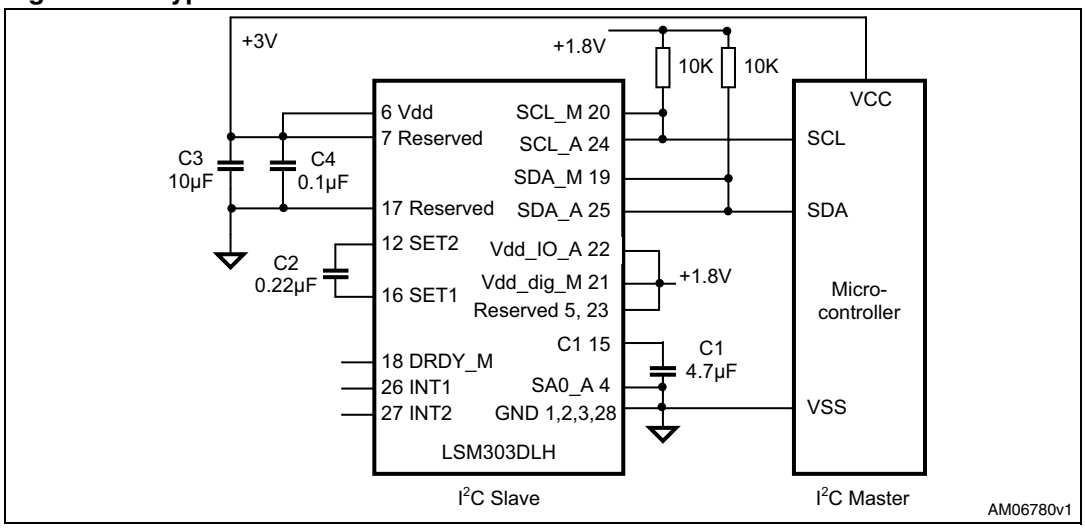

The LSM303DLH is an I^2C slave and the microcontroller is an I^2C master. When designing the hardware, the user should pay attention to the following:

- Some reserved pins not shown in *Figure 5* should be connected to their corresponding pins according to the LSM303DLH datasheet
- Power supply decoupling ceramic capacitors C3 (10 µF) and C4 (0.1 µF) should be placed as near as possible to the Vdd pin 6
- Choose a microcontroller that has a built-in I^2C controller. If a bit-banging scheme implemented in the microcontroller's firmware is used, pay attention to the I^2C communication timing specifications
- The +3 V and +1.8 V power supply should be regulated and clean to reduce the noise

In addition, the handheld device may have high current active components, for example, an RF amplifier circuit. It may also have ferromagnetic metal materials that a magnet would stick to. These generate magnetic field distortion to the earth's magnetic field. Even though the magnetic sensor calibration can compensate these hard-iron and soft-iron distortions, it is recommended to place the LSM303DLH onto the device PCB as far away as possible from the above distortions.

2.2 LSM303DLH accelerometer data acquisition

SA0_A pin 4 in *Figure 5* is tied to ground. So the 7-bit I^2C slave address for the accelerometer, accordingly, is 0011000b or 0x18. For electronic compass applications, a full scale range of ±2 gauss and bandwidth of 10 Hz should be sufficient.

电话：18923720150 邮箱：2355526548@qq.com

天猫店铺网址：https://telesky.tmall.com

After power-on of the LSM303DLH, two registers, CTRL_REG1_A (20h) and CTRL_REG4_A (23h) need to be configured. Write 0x27 to the CTRL_REG1_A register to bring the accelerometer into normal operation mode with ODR 50Hz. Write 0x40 to the CTRL_REG4_A register to keep a full scale range ±2 gauss in continuous data update mode and change the little-endian to a big-endian structure.

The following sample C code shows how to acquire accelerometer data:

```
unsigned char ACC_Data[6];
int Ax, Ay, Az;
void main(void)
{
     Write(0x18, 0x20, 0x27);//set CTRL_REG1_A register
     Write(0x18, 0x23, 0x40);//set CTRL_REG4_A register
     While (1)
     {
       ACC_Data[0] = Read(0x18, 0x28);//read OUT_X_L_A (MSB)
       ACC_Data[1] = Read(0x18, 0x29);//read OUT_X_H_A (LSB)
       ACC_Data[2] = Read(0x18, 0x2A);//read OUT_Y_L_A (MSB)
       ACC_Data[3] = Read(0x18, 0x2B);//read OUT_Y_H_A (LSB)
       ACC_Data[4] = Read(0x18, 0x2C);//read OUT_Z_L_A (MSB)
       ACC_Data[5] = Read(0x18, 0x2D);//read OUT_Z_H_A (LSB)
       Ax = (int) (ACC_Data[0] << 8) + ACC_Data[1];
       Ay = (int) (ACC_Data[2] << 8) + ACC_Data[3];
       Az = (int) (ACC_Data[4] << 8) + ACC_Data[5];
     }
}
```

2.3 LSM303DLH magnetic sensor data acquisition

The 7-bit I^2C slave address for the magnetic sensor is 0011110b or 0x1E. For electronic compass applications, a full scale range of ±1.3 gauss and ODR at 30Hz should be sufficient.

After power-on of the LSM303DLH, two registers CRA_REG_M (00h) and MR_REG_M (02h), need to be configured. Write 0x14 to the CRA_REG_M register to change the ODR from 15 Hz to 30 Hz. Write 0x00 to the MR_REG_M register to put the magnetic sensor into continuous mode from sleep mode.

The following sample C code shows how to acquire magnetic sensor data:

```
unsigned char temp, MR_Data[6];
int Mx, My, Mz;
void main(void)
```


电话：18923720150 邮箱：2355526548@qq.com

天猫店铺网址：https://telesky.tmall.com


```
{
    Write(0x1E, 0x00, 0x14);//set CRA_REG_M register
    Write(0x1E, 0x02, 0x00);//set MR_REG_M register
    While (1)
    {
      Temp = Read(0x1E, 0x02); //read MR_REG_M
      MR_Data[0] = ReadCurrentAddress(); //read OUT_X_H_M (MSB)
      MR_Data[1] = ReadCurrentAddress(); //read OUT_X_L_M (LSB)
      MR_Data[2] = ReadCurrentAddress(); //read OUT_Y_H_M (MSB)
      MR_Data[3] = ReadCurrentAddress(); //read OUT_Y_L_M (LSB)
      MR_Data[4] = ReadCurrentAddress();//read OUT_Z_H_M (MSB)
      MR_Data[5] = ReadCurrentAddress(); //read OUT_Z_L_M (LSB)
      Mx = (int) (MR_Data[0] << 8) + MR_Data[1];
      My = (int) (MR_Data[2] << 8) + MR_Data[3];
      Mz = (int) (MR_Data[4] << 8) + MR_Data[5];
    }
}
```

The pointer address of the magnetic sensor of the LSM303DLH has an automatic update feature. After a read of the MR_REG_M (02h) register, the address pointer automatically increases 1 to 03h which is the OUT_X_H_M register. After a read of the OUT_X_H_M register, the address pointer increases 1 to the OUT_X_L_M register. So one function ReadCurrentAddress() can be used to read 6 bytes of magnetic sensor X-Y-Z data continuously. Please refer to the LSM303DLH datasheet; *Sensor module: 3-axis accelerometer and 3-axis magnetometer*, for more details.

电话：18923720150 邮箱：2355526548@qq.com

天猫店铺网址：https://telesky.tmall.com

3 Calibrating the LSM303DLH

3.1 LSM303DLH accelerometer calibration

All ST MEMS accelerometers are factory calibrated, allowing the user to avoid any further calibration for most of the applications now present in the market. However, to reach a heading accuracy of below 2°, an easy calibration procedure is hereafter described. After the LSM303DLH is installed in the handheld device, it is necessary to calibrate the accelerometer part again at the handheld device's manufacturers in order to determine the offset, the scale factor, and the misalignment matrix with respect to the device body axes $X_b/Y_b/Z_b$. After the device is released to the market, end users don't need to perform further accelerometer calibration in field.

The relationship between the normalized A_{x1}, A_{y1}, and A_{z1} and the accelerometer raw measurements Ax, Ay, and Az can be expressed as,

Equation 3

$$\begin{bmatrix} A_{x1} \\ A_{y1} \\ A_{z1} \end{bmatrix} = [A_m]_{3x3} \begin{bmatrix} 1/A_SC_x & 0 & 0 \\ 0 & 1/A_SC_y & 0 \\ 0 & 0 & 1/A_SC_z \end{bmatrix} \cdot \begin{bmatrix} A_x - A_OS_x \\ A_y - A_OS_y \\ A_z - A_OS_z \end{bmatrix}$$

$$= \begin{bmatrix} ACC_{11} & ACC_{12} & ACC_{13} \\ ACC_{21} & ACC_{22} & ACC_{23} \\ ACC_{31} & ACC_{32} & ACC_{33} \end{bmatrix} \cdot \begin{bmatrix} A_x \\ A_y \\ A_z \end{bmatrix} + \begin{bmatrix} ACC_{10} \\ ACC_{20} \\ ACC_{30} \end{bmatrix}$$

where [A_m] is a 3x3 misalignment matrix between the accelerometer sensing axes and the device body axes; A_SCi (i = x, y, z) is the scale factor and A_OSi is the offset.

The goal of the accelerometer calibration is to determine 12 parameters from ACC10 to ACC33 so that with any given raw measurements at arbitrary positions, the normalized values can be obtained. Therefore, pitch and roll can be calculated by *Equation 10* in *Appendix A*.

The calibration can be performed at 6 stationary positions as shown in *Table 2* in Appendix A. Collect 5 to 10 second accelerometer raw data at each position with known A_{x1}, A_{y1}, and A_{z1}. Then apply the least square method to obtain the optimal 12 accelerometer calibration parameters. Please refer to *Appendix B* for the accelerometer calibration.

In order to get better pitch/roll accuracy, the user can add 4 more stationary positions for accelerometer calibration. They are: 2 positions with $A_x = 0$, $A_y = \pm 0.707g$, $A_z = -0.707g$, and 2 positions with $A_x = \pm 0.707g$, $A_y = 0$, $A_z = -0.707g$.

3.2 LSM303DLH magnetic sensor calibration

LSM303DLH has a magnetic field resolution of 8 mGauss at Vdd = +3 V. And the average magnitude of the horizontal magnetic field component is in about the 200 mGauss range (more at the equator, less near the magnetic poles). Therefore, the expected heading accuracy is about 2.3° [=arctan (8/200)].

At a full scale range of ±1.3 gauss, the sensitivity of the LSM303DLH's magnetic sensor is 1055 LSB/gauss for the X/Y axis and 950 LSB/gauss for the Z axis. For example in San Francisco, California, the earth's magnetic field strength is 0.49932 gauss with a declination

电话：18923720150 邮箱：2355526548@qq.com

天猫店铺网址：https://telesky.tmall.com

angle of 15.5 º and an inclination angle of 61.4º. Then the Z_b component, in *Figure 1*, is 0.438 gauss. So the Mz raw measurement should be around 950 x 0.438 = +416 LSBs.

The relationship between the normalized M_{x1}, M_{y1}, and M_{z1} and the magnetic sensor raw measurements M_x, M_y, and M_z can be expressed as,

Equation 4

$$\begin{bmatrix} M_{x1} \\ M_{y1} \\ M_{z1} \end{bmatrix} = [M_m]_{3x3} \begin{bmatrix} 1/M_SC_x & 0 & 0 \\ 0 & 1/M_SC_y & 0 \\ 0 & 0 & 1/M_SC_z \end{bmatrix} \cdot [M_si]_{3x3} \begin{bmatrix} M_x - M_OS_x \\ M_y - M_OS_y \\ M_z - M_OS_z \end{bmatrix}$$

$$= \begin{bmatrix} MR_{11} & MR_{12} & MR_{13} \\ MR_{21} & MR_{22} & MR_{23} \\ MR_{31} & MR_{32} & MR_{33} \end{bmatrix} \cdot \begin{bmatrix} M_x - MR_{10} \\ M_y - MR_{20} \\ M_z - MR_{30} \end{bmatrix}$$

where [M_m] is a 3x3 misalignment matrix between the magnetic sensor sensing axes and the device body axes; M_SCi (i = x, y, z) is the scale factor and M_OSi is the offset caused by hard-iron distortion; [M_si] is a 3x3 matrix caused by soft-iron distortion.

The goal of the magnetic sensor calibration is to determine the parameters from MR10 to MR33 so that with any given raw measurements at arbitrary positions, the normalized values can be obtained. Therefore, the heading can be calculated by *Equation 12* and *13* in *Appendix A* for tilt compensation.

3.2.1 Terminology

Hard-iron interference magnetic field is normally generated by ferromagnetic materials with permanent magnetic fields that are part of the handheld device structure. These materials could be permanent magnets or magnetized iron or steel. They are time invariant. These unwanted magnetic fields are superimposed on the output of the magnetic sensor measurements of the earth's magnetic field. The effect of this superposition is to bias the magnetic sensor outputs. It is described as M_OSi (i = x, y, z) or MR_{10}, MR_{20} and MR_{30} in *Equation 4*.

A soft-iron interference magnetic field is generated by the items inside the handheld device. They could be current carrying traces on the PCB or magnetically soft materials. They generate a time varying magnetic field that is superimposed on the magnetic sensor output in response to the earth's magnetic field. The effect of the soft-iron distortion is to make a full round rotation circle become a tilted ellipse. It is described as the [M_si] 3x3 matrix in *Equation 4*.

Scale factor error is defined as the mismatch of the sensitivity of the magnetic sensor sensing axes. Ideally, the 3-axis magnetic sensors that make up the triad are identical. In reality, however, this may not be the case. Each magnetic sensor channel may have different sensitivities. The effect of the scale factor error causes the full round rotation circle to become an ellipse. It is described as M_SCi (i = x, y, z) in *Equation 4*.

Misalignment error is defined as the angles between the magnetic sensor sensing axes and the device body axes. When assembling the LSM303DLH in the handheld device, these small angles always exist and need to be compensated. It is described as [M_m] 3x3 matrix in *Equation 4*.

Magnetic sensor calibration can be performed by 3 full round rotations along with device body axis Z_b down, Y_b down, and X_b down respectively, at a leveled smooth surface without a nearby interference magnetic field. They are 2D rotations. The rotation speed should be

电话：18923720150 邮箱：2355526548@qq.com

天猫店铺网址：https://telesky.tmall.com

slow in order to collect as many data points as possible. But it does not require constant rotation speed and an accurate sampling time interval. The full round rotation can be clockwise or counterclockwise. Collected magnetic sensor raw data of 3 full round rotations is used to accurately determine the 12 magnetic sensor calibration parameters.

3D random rotations are performed by rotating the handheld device in random directions. If the handheld device doesn't have hard-iron and soft-iron interference magnetic fields, and the scale factor of each axis is identical, and the LSM303DLH magnetic sensor's sensing axes are aligned to the device body axes, then each full round rotation forms a centered circle with the same radius and the 3D rotations form a centered sphere. However, due to the hard-iron and soft-iron magnetic field distortions, and the errors of the scale factor and the misalignment, the centered sphere becomes a shifted, tilted ellipsoid when plotting the collected magnetic sensor raw data.

The 3 steps for magnetic sensor calibration are presented in *Appendix C*.

Please note that the magnetic sensor calibration can only compensate the hard-iron and soft-iron interference magnetic field generated by the handheld device itself. This means that during full round rotations of the calibration, the hard-iron and soft-iron fields also rotate with the device.

The electronic compass is sensitive to environmental magnetic interference fields outside of the handheld device. A single Z-axis gyro chip can be used to aid the compass when environmental magnetic interference is detected.

电话：18923720150 邮箱：2355526548@qq.com

天猫店铺网址：https://telesky.tmall.com

4 Testing the electronic compass

After the calibration parameters for the accelerometer and the magnetic sensor of the LSM303DLH have been determined, it is necessary to check the performance of the electronic compass. This could be carried out with accurate lab testing and rough field testing. The expected pitch/roll/heading accuracy is shown in *Table 1*.

Table 1. Expected pitch/roll/heading accuracy

Parameter	Value
Heading accuracy	< 2° RMS (tilt within ±50°), range: 0° ~ 359.9°
Pitch and roll accuracy	< 1° RMS (tilt within ±50°), range: -90° ~ +90°
Resolution	0.1° for heading, pitch, and roll

4.1 Lab testing

A convenient setup for accurate lab testing is a wooden platform with 3 degrees of rotation freedom, as shown in *Figure 6*.

Figure 6. Lab testing setup

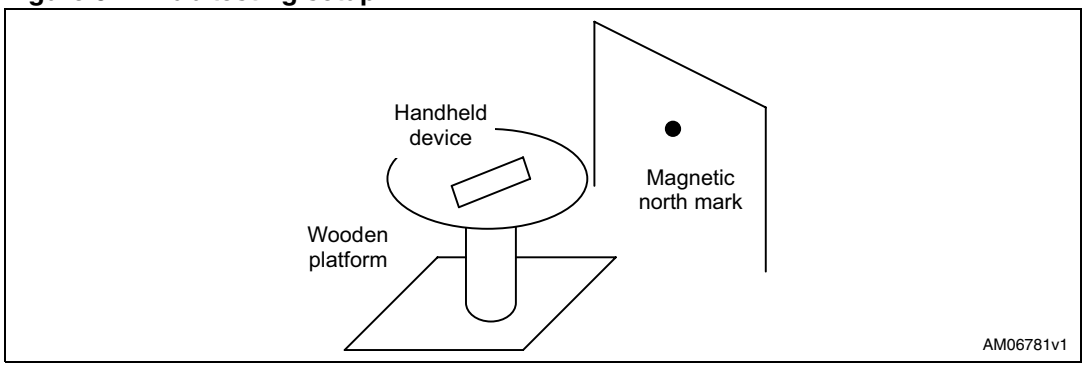

There should be no strong external interference magnetic field close to the wooden platform. CRT monitors, power cords, electrical equipment, and metallic frames, sometimes hidden in the structure below the wooden platform, have to be removed during testing. If the local magnetic north direction is known by means of a reference magnetometer, a sign can be placed on a side panel and the handheld device fixed to the top of the platform. An optical head may be used to align X_b to the mark.

4.1.1 Absolute heading testing

- Level the wooden platform
- Align the handheld device X_b axis to the local magnetic north direction mark on the wall
- Check the heading output of the electronic compass. It should be 0º ± 2º. This is the absolute heading accuracy at 0º
- Rotate the wooden platform horizontally clockwise or counterclockwise at a random angle which can be read from the marks on the platform. Then compare the compass

电话：18923720150 邮箱：2355526548@qq.com

天猫店铺网址：https://telesky.tmall.com

heading output with the known heading angle. The difference should be within ± 2º. This is the absolute heading accuracy at random position.

- Fix a certain position. Rotate the platform back and forth and then stop at the same position. The repeatability error also should be within ± 2º.

4.1.2 Tilt compensation testing

- Level the wooden platform
- Align the handheld device X_b axis to any direction. Record the compass heading output value
- Rotate the platform around the Y_b axis to generate a plus or minus pitch angle which can be read from the marks on the wooden platform. Compare the compass pitch output with the known pitch angle. The difference should be within ± 1º (see *Table 1*). At the same time the change of the compass heading output should be within ± 2º which means the compass is tilt compensated
- Level the wooden platform
- Align the handheld device X_b axis to any direction. Record the compass heading output value
- Rotate the platform around the X_b axis to generate a plus or minus roll angle which can be read from the marks on the platform. Compare the compass roll output with the known roll angle. The difference should be within ± 1º (see *Table 1*). At the same time the change of the compass heading output should be within ± 2º which means the compass is tilt compensated.

4.2 Field testing

In any physical situations outside the lab, rough field testing can be performed. A wooden table with a smooth surface is required. The surface does not have to be leveled. Draw some lines, for example, 20º apart on a white sheet of paper as shown in *Figure 7*.

Figure 7. Field testing setup

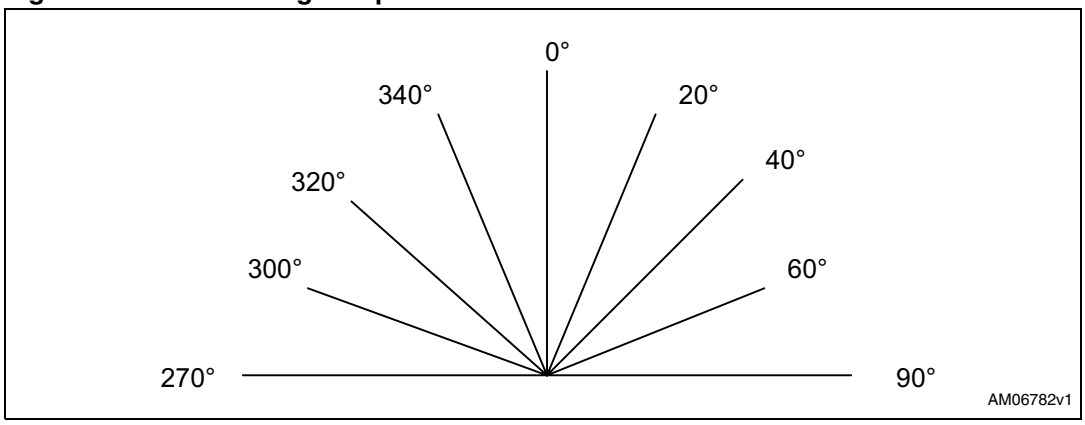

电话：18923720150 邮箱：2355526548@qq.com

天猫店铺网址：https://telesky.tmall.com

4.2.1 Relative heading testing

- Place the handheld device on the paper which is taped to the wooden table
- Align the device X_b axis to any direction
- Align the left edge of the device to any line in *Figure 7*
- Record the compass heading output value
- Use one hand or both hands to rotate the device to align its left edge to any other line. Then the difference between the compass new heading output and the previous one should be the same as the difference of the line degree change. The error should be within ± 2º
- Another quick and easy way to check the relative heading accuracy is to align the left edge of the device to the wooden table edge. Record the compass heading output value. Then rotate the device and align the top edge, bottom edge, or right edge to the same table edge. The difference between the new heading output and the previous output should be either ± 90º or 180º with an error of ± 2º.

4.2.2 Tilt compensation testing

- Place the handheld device on the wooden table with the X_b axis pointing in any direction
- Use two hands to hold the device and tilt the device along its top or bottom edge carefully
- While the compass pitch output is changing, the heading output should remain the same with an error of ± 2º. This means the compass is tilt compensated
- Use two hands to hold the device and tilt the device along its left or right edge
- While the compass roll output is changing, the heading output should remain the same with an error of ± 2º. This means the compass is tilt compensated.

电话：18923720150 邮箱：2355526548@qq.com

天猫店铺网址：https://telesky.tmall.com

5 Firmware implementation

Some microcontrollers may not support floating point operation and are timing critical. In order to build a standalone tilt compensated electronic compass, the following recommendations may be helpful:

- Use look-up tables for sin, cos, arcsin, and arctan functions to reduce clock cycles
- Use assembly code to implement signed integer multiplication and division subroutines to reduce clock cycles
- If some sensor calibration parameters are very small, the user can multiply the whole accelerometer and magnetic sensor calibration parameter matrix with a big constant integer, then divide it before the pitch/roll/heading calculation
- Use internal EEPROM to save sensor calibration parameters
- Implement some kind of digital filtering or simple moving average function onto the sensor raw measurements to reduce the noise level and improve the pitch/roll/heading accuracy

电话：18923720150 邮箱：2355526548@qq.com

天猫店铺网址：https://telesky.tmall.com

Appendix A LSM303DLH pitch/roll/heading calculation

Assume that the LSM303DLH chip has been installed in a handheld device, such as a cell phone, or a PDA or simply on a PCB board as shown in *Figure 8*.

Figure 8. Electronic compass coordinate system

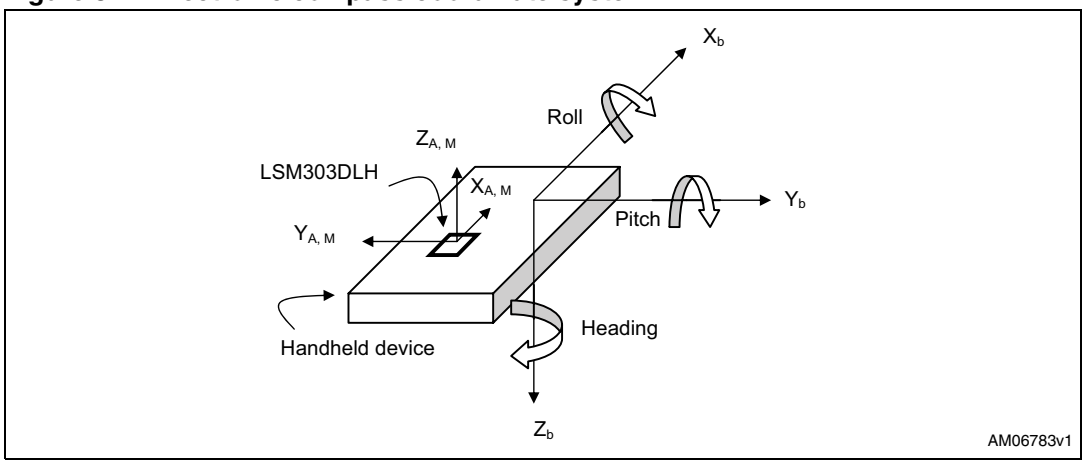

X_b, Y_b, and Z_b are the handheld device body axes with forward-right-down configuration. $X_{A,M}$, $Y_{A,M}$, and $Z_{A,M}$ are the accelerometer and magnetic sensor sensing axes, respectively. Note that the sign of $Y_{A,M}$ and $Z_{A,M}$ from the sensor measurements needs to be reversed to make the sensing axes the same direction as the device body axes.

Pitch/roll/heading angles are referenced to the local horizontal plane which is perpendicular to the earth's gravity.

- Heading (ψ) or azimuth is defined as the angle with respect to the magnetic north pole. It is always positive from 0º to +359º when rotating around the Z_b axis clockwise top-view with right-hand rule. If the heading with respect to the geographic north is required, then the declination angle at the user's current geographic location should be added or subtracted from the magnetic heading
- Pitch (ρ) is defined as the angle between the X_b axis and the horizontal plane. It goes from 0º to +90º when rotating around the Y_b axis with the X_b axis moving upwards. When the X_b axis is moving downwards, the pitch angle goes from 0º to -90º
- Roll (γ) is defined as the angle between the Y_b axis and the horizontal plane. It goes from 0º to +90º when rotating around the X_b axis with the Y_b axis moving downwards. When the Y_b axis is moving upwards, the roll angle goes from 0º to -90º.

Let A_x, A_y, A_z be the accelerometer raw measurement, and M_x, M_y, M_z the magnetic sensor raw measurement. *Table 2* shows the sign definition of the sensor raw data at 6 stationary positions. For example, in *Figure 8*, X_b and Y_b are level, Z_b is pointing down. Therefore, $A_x = A_y = 0$, $A_z = +1g$. M_x and M_y can be positive (+) or negative (-), while Mz should be positive if the current location is in the northern hemisphere.

电话：18923720150 邮箱：2355526548@qq.com

天猫店铺网址：https://telesky.tmall.com

Table 2. Sign definition of LSM303DLH sensor raw measurements

Stationary position	Accelerometer (signed integer)			Magnetic sensor (signed integer)		
	A_x	A_y	A_z	M_x	M_y	M_z
Z_b down	0	0	+1g	+ or -	+ or -	+
Z_b up	0	0	-1g	+ or -	+ or -	-
Y_b down	0	+1g	0	+ or -	+	+ or -
Y_b up	0	-1g	0	+ or -	-	+ or -
X_b down	+1g	0	0	+	+ or -	+ or -
X_b up	-1g	0	0	-	+ or -	+ or -

A.1 Pitch/roll calculation

When the device is at an arbitrary 3D position X'_b, Y'_b, and Z'_b, there are a few rotation procedures to rotate the device from the local level frame X_b, Y_b, and Z_b, shown in *Figure 8*, to that 3D position. Different rotation procedures result in different rotation matrix. The aircraft convention of angle rotation is used in this application note.

Firstly, rotate the handheld device around the Z_b axis clockwise at an angle (ψ) with the view from the origin to downwards. Then rotate the device around Y_b at an angle (ρ) with X_b moving upwards. Then rotate the device around X_b at an angle (γ) with Y_b moving downwards. The new device body axes become X'_b, Y'_b, and Z'_b, as shown in *Figure 9*.

Figure 9. Rotation procedures

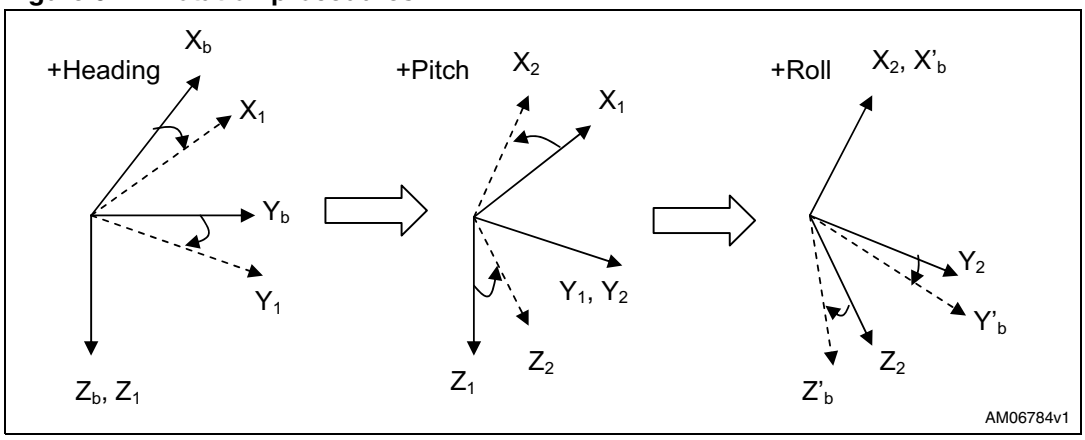

Then each rotation matrix is:

Equation 5

$$R_\psi = \begin{bmatrix} \cos\psi & \sin\psi & 0 \\ -\sin\psi & \cos\psi & 0 \\ 0 & 0 & 1 \end{bmatrix}$$

电话：18923720150 邮箱：2355526548@qq.com

天猫店铺网址：https://telesky.tmall.com

Equation 6

$$R_\rho = \begin{bmatrix} \cos\rho & 0 & -\sin\rho \\ 0 & 1 & 0 \\ \sin\rho & 0 & \cos\rho \end{bmatrix}$$

Equation 7

$$R_\gamma = \begin{bmatrix} 1 & 0 & 0 \\ 0 & \cos\gamma & \sin\gamma \\ 0 & -\sin\gamma & \cos\gamma \end{bmatrix}$$

And the relationship between $X'_b/Y'_b/Z'_b$ and $X_b/Y_b/Z_b$ is:

Equation 8

$$\begin{bmatrix} X'_b \\ Y'_b \\ Z'_b \end{bmatrix} = R_\gamma R_\rho R_\psi \begin{bmatrix} X_b \\ Y_b \\ Z_b \end{bmatrix}$$
$$= \begin{bmatrix} \cos\rho\cos\psi & \cos\rho\sin\psi & -\sin\rho \\ \cos\psi\sin\rho\sin\gamma - \cos\gamma\sin\psi & \cos\gamma\cos\psi + \sin\rho\sin\gamma\sin\psi & \cos\rho\sin\gamma \\ \cos\psi\sin\rho\cos\gamma + \sin\gamma\sin\psi & -\sin\gamma\cos\psi + \sin\rho\cos\gamma\sin\psi & \cos\rho\cos\gamma \end{bmatrix} \cdot \begin{bmatrix} X_b \\ Y_b \\ Z_b \end{bmatrix}$$

In the local horizontal plane, as shown in *Figure 8*, $X_b = Y_b = 0$, $Z_b = +1g$. At $X'_b/Y'_b/Z'_b$, the LSM303DLH accelerometer raw measurements are Ax, Ay, and Az which are signed integer in terms of LSBs. Let A_{x1}, A_{y1}, and A_{z1} be the normalized values after applying accelerometer calibration parameters into A_x, A_y, and A_z. So A_{x1}, A_{y1}, and A_{z1} become floating point values less than 1 in terms of g (earth gravity), and the root sum of their squared values should be equal to 1 when the accelerometer is still. Then *Equation 8* becomes:

Equation 9

$$\begin{bmatrix} A_{x1} \\ A_{y1} \\ A_{z1} \end{bmatrix} = \begin{bmatrix} \cos\rho\cos\psi & \cos\rho\sin\psi & -\sin\rho \\ \cos\psi\sin\rho\sin\gamma - \cos\gamma\sin\psi & \cos\gamma\cos\psi + \sin\rho\sin\gamma\sin\psi & \cos\rho\sin\gamma \\ \cos\psi\sin\rho\cos\gamma + \sin\gamma\sin\psi & -\sin\gamma\cos\psi + \sin\rho\cos\gamma\sin\psi & \cos\rho\cos\gamma \end{bmatrix} \cdot \begin{bmatrix} 0 \\ 0 \\ 1 \end{bmatrix}$$

Therefore, pitch and roll angle can be calculated as:

Equation 10

$$\text{Pitch} = \rho = \arcsin(-A_{x1})$$
$$\text{Roll} = \gamma = \arcsin(A_{y1} / \cos\rho)$$

Note: *When pitch = ±90º, roll should be set to 0º to avoid singularity*

The arcsin function has good linearity between about -45º to +45º, so the accuracy of the pitch and roll calculation degrades when tilt angles exceed this range

Normalized accelerometer measurement A_{z1} is not used for the pitch and roll calculation. But it can be used to check if the magnitude $|A| = \sqrt{A_{x1}^2 + A_{y1}^2 + A_{z1}^2}$ is equal to 1. If not, then it means linear acceleration or angular acceleration is detected.

电话：18923720150 邮箱：2355526548@qq.com

天猫店铺网址：https://telesky.tmall.com

A.2 Heading calculation

For the heading calculation, 3-axis magnetic sensor measurements need to be normalized by applying magnetic sensor calibration parameters and then reflected onto the horizontal plane by tilt compensation, as shown in *Figure 10*.

Figure 10. Heading calculation

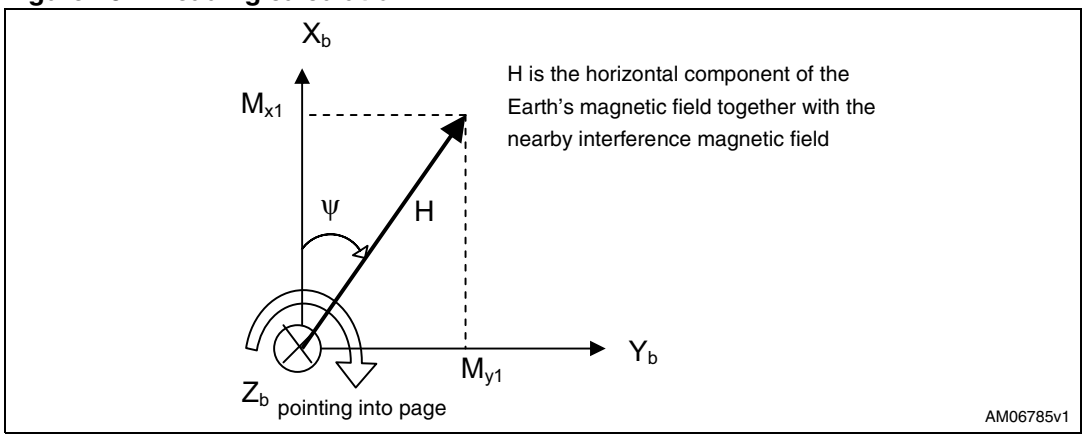

If the device rotates from $X_b/Y_b/Z_b$ to $X''_b/Y''_b/Z''_b$ by roll angle rotation followed by pitch angle rotation, then

Equation 11

$$\begin{bmatrix} X_b \\ Y_b \\ Z_b \end{bmatrix} = R_\gamma^{-1} R_\rho^{-1} \begin{bmatrix} X''_b \\ Y''_b \\ Z''_b \end{bmatrix} = \begin{bmatrix} \cos\rho & 0 & \sin\rho \\ \sin\gamma\sin\rho & \cos\gamma & -\sin\gamma\cos\rho \\ -\cos\gamma\sin\rho & \sin\gamma & \cos\gamma\cos\rho \end{bmatrix} \cdot \begin{bmatrix} X''_b \\ Y''_b \\ Z''_b \end{bmatrix}$$

Let M_{x1}, M_{y1}, and M_{z1} be the normalized magnetic sensor measurements after applying calibration parameters correction into magnetic sensor raw measurements M_x, M_y, and M_z at new positions $X''_b/Y''_b/Z''_b$. M_x, M_y and M_z which are signed integer in terms of LSBs, while M_{x1}, M_{y1}, and M_{z1} are floating point values less than 1 in terms of the magnetic field strength, and the square root of the sum squared values should be equal to 1 when the there is no external interference magnetic field. Then from *Equation 11*, tilt compensated magnetic sensor measurements M_{x2}, M_{y2}, and M_{z2} can be obtained as:

Equation 12

$$\begin{aligned} M_{x2} &= M_{x1}\cos\rho + M_{z1}\sin\rho \\ M_{y2} &= M_{x1}\sin\gamma\sin\rho + M_{y1}\cos\gamma - M_{z1}\sin\gamma\cos\rho \\ M_{z2} &= -M_{x1}\cos\gamma\sin\rho + M_{y1}\sin\gamma + M_{z1}\cos\gamma\cos\rho \end{aligned}$$

电话：18923720150 邮箱：2355526548@qq.com

天猫店铺网址：https://telesky.tmall.com

Therefore,

Equation 13

$$\begin{aligned}
\text{Heading} = \psi &= \arctan\left(M_{y2}/M_{x2}\right) && \text{for } M_{x2} > 0 \text{ and } M_{y2} >= 0 \\
&= 180° + \arctan\left(M_{y2}/M_{x2}\right) && \text{for } M_{x2} < 0 \\
&= 360° + \arctan\left(M_{y2}/M_{x2}\right) && \text{for } M_{x2} > 0 \text{ and } M_{y2} <= 0 \\
&= 90° && \text{for } M_{x2} = 0 \text{ and } M_{y2} < 0 \\
&= 270° && \text{for } M_{x2} = 0 \text{ and } M_{y2} > 0
\end{aligned}$$

The magnitude $|M| = \sqrt{M_{x2}^2 + M_{y2}^2 + M_{z2}^2}$ should also be equal to 1. If not, it means that the external magnetic interference field is detected or a pitch/roll error is present.

Because the accelerometer measurements cannot distinguish earth's gravity from linear acceleration or angular acceleration, fast motion causes pitch/roll calculation error which then directly introduces an error to the heading calculation. In most cases, the fast motion doesn't last long and the device goes back to a stationary position. So the heading accuracy in an electronic compass means static accuracy when the device is still or without acceleration.

电话：18923720150 邮箱：2355526548@qq.com

天猫店铺网址：https://telesky.tmall.com

Appendix B Accelerometer calibration method

Let's consider accelerometer calibration at 6 stationary positions, as shown in *Table 2*. *Equation 3* can be rewritten as:

Equation 14

$$\begin{bmatrix} A_{x1} & A_{y1} & A_{z1} \end{bmatrix} = \begin{bmatrix} A_x & A_y & A_z & 1 \end{bmatrix} \cdot \begin{bmatrix} ACC_{11} & ACC_{21} & ACC_{31} \\ ACC_{12} & ACC_{22} & ACC_{32} \\ ACC_{13} & ACC_{23} & ACC_{33} \\ ACC_{10} & ACC_{20} & ACC_{30} \end{bmatrix}$$

Or

Equation 15

$$Y = w \cdot X$$

Where,

Matrix X is the 12 calibration parameters that need to be determined

Matrix w is sensor raw data LSBs collected at 6 stationary positions

Matrix Y is the known normalized earth gravity vector

For example,

- At Z_b down position (P1 position), $\begin{bmatrix} A_{x1} & A_{y1} & A_{z1} \end{bmatrix} = \begin{bmatrix} 0 & 0 & 1 \end{bmatrix}$ and assume that at Z_b down position, n1 sets of accelerometer raw data A_x, A_y, and A_z have been collected. Then,

Equation 16

$$Y_1 = \begin{bmatrix} 0 & 0 & 1 \end{bmatrix}_{n1x3}$$
$$w_1 = \begin{bmatrix} A_{xP1} & A_{yP1} & A_{zP1} & 1 \end{bmatrix}_{n1x4}$$

Where,

The matrix Y_1 has the same row of [0 0 1]

The matrix W_1 contains raw data in the format of LSBs

- At Z_b up position (P2 position), $\begin{bmatrix} A_{x1} & A_{y1} & A_{z1} \end{bmatrix} = \begin{bmatrix} 0 & 0 & -1 \end{bmatrix}$ and assume that at Z_b up position, n2 sets of accelerometer raw data A_x, A_y, and A_z have been collected. Then,

Equation 17

$$Y_2 = \begin{bmatrix} 0 & 0 & -1 \end{bmatrix}_{n2x3}$$
$$w_2 = \begin{bmatrix} A_{xP2} & A_{yP2} & A_{zP2} & 1 \end{bmatrix}_{n2x4}$$

- At Y_b down position (P3 position), $\begin{bmatrix} A_{x1} & A_{y1} & A_{z1} \end{bmatrix} = \begin{bmatrix} 0 & 1 & 0 \end{bmatrix}$ and assume that at Y_b down position, n3 sets of accelerometer raw data A_x, A_y, and A_z have been collected. Then,

Equation 18

$$Y_3 = \begin{bmatrix} 0 & 1 & 0 \end{bmatrix}_{n3x3}$$
$$w_3 = \begin{bmatrix} A_{xP3} & A_{yP3} & A_{zP3} & 1 \end{bmatrix}_{n3x4}$$

电话：18923720150 邮箱：2355526548@qq.com

天猫店铺网址：https://telesky.tmall.com

- At Y_b up position (P4 position), $\lfloor A_{x1} \quad A_{y1} \quad A_{z1} \rfloor = [0 \quad -1 \quad 0]$ and assume that at Y_b up position, n4 sets of accelerometer raw data A_x, A_y, and A_z have been collected. Then,

Equation 19

$$Y_4 = [0 \quad -1 \quad 0]_{n4x4}$$
$$w_4 = [A_{xP4} \quad A_{yP4} \quad A_{XP4} \quad 1]_{n4x4}$$

- At X_b down position (P5 position), $\lfloor A_{x1} \quad A_{y1} \quad A_{z1} \rfloor = [1 \quad 0 \quad 0]$ and assume that at X_b down position, n5 sets of accelerometer raw data A_x, A_y, and A_z have been collected. Then,

Equation 20

$$Y_5 = [1 \quad 0 \quad 0]_{n5x3}$$
$$w_5 = [A_{xP5} \quad A_{yP5} \quad A_{zP5} \quad 1]_{n5x4}$$

- At X_b up position (P6 position), $\lfloor A_{x1} \quad A_{y1} \quad A_{z1} \rfloor = [-1 \quad 0 \quad 0]$ and assume that at X_b up position, n6 sets of accelerometer raw data A_x, A_y, and A_z have been collected. Then,

Equation 21

$$Y_6 = [-1 \quad 0 \quad 0]_{n6x3}$$
$$w_6 = [A_{xP6} \quad A_{yP6} \quad A_{zP6} \quad 1]_{n6x4}$$

Combine *Equation 16* with *Equation 21* and let n = n1 + n2 + n3 + n4 + n5 + n6, then *Equation 15* becomes,

Equation 22

$$Y_{nx3} = w_{nx4} \cdot X_{4x3}$$

Where,

Equation 23

$$Y = \begin{bmatrix} Y_1 \\ Y_2 \\ Y_3 \\ Y_4 \\ Y_5 \\ Y_6 \end{bmatrix}_{nx3}$$
$$w = \begin{bmatrix} w_1 \\ w_2 \\ w_3 \\ w_4 \\ w_5 \\ w_6 \end{bmatrix}_{nx4}$$

Therefore, the calibration parameter matrix X can be determined by the least square method as,

电话：18923720150 邮箱：2355526548@qq.com

天猫店铺网址：https://telesky.tmall.com

Equation 24

$$X = \left[w^T \cdot w\right]^{-1} \cdot w^T \cdot Y$$

Where,

w^T means matrix transpose

$\left[w^T \cdot w\right]^{-1}$ means matrix inverse

电话：18923720150 邮箱：2355526548@qq.com

天猫店铺网址：https://telesky.tmall.com

Appendix C Magnetic sensor calibration method

C.1 Step 1: Soft-iron effect verification

It is always good to know if the device has soft-iron interference before choosing which model for the identification of the calibration parameters, tilted ellipsoid, or non-tilted ellipsoid. This can be done by performing 3D rotations in a clean environmental area. Then plot the collected magnetic sensor raw data to check if there is a soft-iron interference field inside the device. This set of data is not used for the following magnetic sensor calibration. However, in practical situations, three 2D full round rotations may not be easy to perform. Then an amount of 3D rotations data can be used for rough field calibration.

An example plot of 3D rotations data and three 2D full round rotations data is shown in *Figure 11*. It is obvious that this electronic compass has a built-in soft-iron effect.

Figure 11. 3D rotations plus three 2D full round rotations

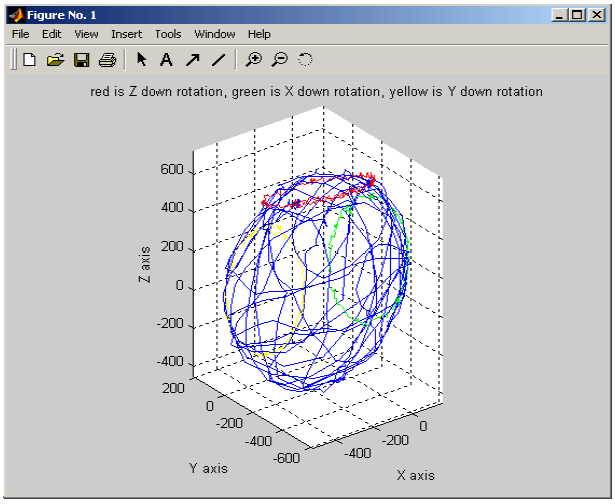

C.2 Step 2: Hard-iron, soft-iron and scale factor compensation

If there is soft-iron distortion, the 3D rotations show a tilt ellipsoid which can be described as the following equation:

Equation 25

$$\frac{(x-x0)^2}{a^2}+\frac{(y-y0)^2}{b^2}+\frac{(z-z0)^2}{c^2}+\frac{(x-x0)(y-y0)}{d^2}+\frac{(x-x0)(z-z0)}{e^2}+\frac{(y-y0)(z-z0)}{f^2}=R^2$$

where:

- x0, y0, z0 are the offsets M_OSi (i = x, y, z) caused by hard-iron distortion
- x, y, z are magnetic sensor raw data M_x, M_y and M_z
- a, b, c are the semi-axes lengths,
- d, e, f are cross axis effect to make the ellipsoid tilted,
- R is a constant of the earth's magnetic field strength.

电话：18923720150 邮箱：2355526548@qq.com

天猫店铺网址：https://telesky.tmall.com

If there is no soft-iron distortion inside the device, or the soft-iron effect is very small and can be ignored, then the ellipsoid from 3D rotations is not tilted. So the soft-iron matrix [M_si] is a 3x3 identity matrix and *Equation 25* can be simplified as:

Equation 26

$$\frac{(x-x0)^2}{a^2}+\frac{(y-y0)^2}{b^2}+\frac{(z-z0)^2}{c^2}=R^2$$

Therefore, the least square fitting ellipsoid method can be used to discover the parameters of M_SCi, M_OSi (i = x, y, z) and [M_si]. The magnetic sensor raw data used here could be three 2D full round rotations, or 3D rotations, or both.

Applying these parameters to the collected 3D rotations data and three 2D full round rotations, the plot is shown in *Figure 12*. Now the shifted tilted ellipsoid becomes a centered unit sphere.

Figure 12. After hard-iron, soft-iron, and scale factor compensation

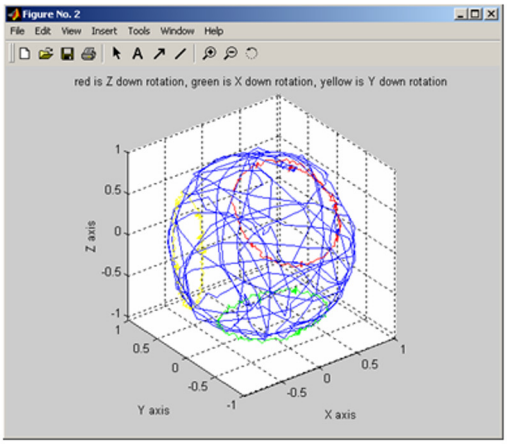

AN06788v1

Let's assume there is no soft-iron distortion. The soft-iron matrix [M_si] is a 3x3 identity matrix. Then *Equation 26* can be rewritten as:

Equation 27

$$x^2=\begin{bmatrix}x & y & z & -y^2 & -z^2 & 1\end{bmatrix}\cdot\begin{bmatrix}2x_0\\ \frac{a^2}{b^2}2y_0\\ \frac{a^2}{c^2}2z_0\\ \frac{a^2}{b^2}\\ \frac{a^2}{c^2}\\ a^2R^2-x_0^2-\frac{a^2}{b^2}y_0^2-\frac{a^2}{c^2}z_0^2\end{bmatrix}$$

After three 2D full round rotations magnetic sensor raw data have been collected, it is possible to combine M_x, M_y, and M_z as column vector and row vector. Then *Equation 27* becomes,

电话：18923720150 邮箱：2355526548@qq.com

天猫店铺网址：https://telesky.tmall.com

Equation 28

$$w_{nx1} = [H]_{nx6} \cdot X_{6x1}$$

The least square method can be applied to determine the parameters X vector as:

Equation 29

$$X = \left[H^T H\right]^{-1} H^T \cdot w$$

Then,

Equation 30

$$\begin{aligned} M_OS_x &= x_0 = X(1)/2 \\ M_OS_y &= y_0 = X(2)/(2 \cdot X(4)) \\ M_OS_z &= z_0 = X(3)/(2 \cdot X(5)) \end{aligned}$$

And,

Equation 31

$$\begin{aligned} A &= a^2 R^2 = X(6) + x_0^2 + X(4) \cdot y_0^2 + X(5) \cdot z_0^2 \\ B &= A / X(4) \\ C &= A / X(5) \end{aligned}$$

Let,

Equation 32

$$\begin{aligned} xx &= M_x - M_OS_x \\ yy &= M_y - M_OS_y \\ zz &= M_z - M_OS_z \end{aligned}$$

Then *Equation 26* becomes,

Equation 33

$$\frac{xx^2}{A} + \frac{yy^2}{B} + \frac{zz^2}{C} = 1$$

Therefore,

Equation 34

$$\begin{aligned} M_SC_x &= \sqrt{A} \\ M_SC_y &= \sqrt{B} \\ M_SC_z &= \sqrt{C} \end{aligned}$$

电话：18923720150 邮箱：2355526548@qq.com

天猫店铺网址：https://telesky.tmall.com

Let,

Equation 35

$$xxx = xx / M_SC_x$$
$$yyy = yy / M_SC_y$$
$$zzz = zz / M_SC_z$$

Then,

Equation 36

$$xxx^2 + yyy^2 + zzz^2 = 1$$

Up to now, M_SCi (i = x, y, z), the scale factor, M_OSi, the offset caused by hard-iron distortion, and [M_si], 3x3 matrix caused by soft-iron distortion have been determined. Applying these parameters to three 2D full round rotations and 3D random rotations, the 3D random rotations become a centered unit sphere with three 2D full round rotations sitting on its surface. Similarly, the least square method can be used to determine the [M_si] 3x3 matrix when there is soft-iron distortion.

C.3 Step 3: Misalignment error compensation

Misalignment error compensation is to align the magnetic sensor sensing axes to the device body axes based on three 2D full round rotations, as shown in *Figure 12*. The vector dot-product method can be used to find each normalized vector that rotates, corrected, three 2D full round rotation circles to their corresponding body axes. The normalized vector means the magnitude is equal to 1. These 3 vectors form the [M_m] 3x3 misalignment matrix described in *Equation 4*.

Applying the [M_m] 3x3 misalignment matrix to the above unit sphere and three 2D circles, the plot is shown in *Figure 13*. Now three 2D full round rotations are aligned to the device body axes. For example, the red color Z_b down rotation is parallel to X_b - Y_b plane.

Let's consider the Z_b down rotation. After hard-iron and scale factor correction, the rotation becomes a centered circle. If the circle is aligned to the device Z_b axis, then all zzz_z values of the Z_b down rotation circle should be the same, less than 1. If it is not the case, then a vector can be found to rotate this circle to align to the device Z_b axis.

Let,

Equation 37

$$H_{mx3} = \begin{bmatrix} xxx_z & yyy_z & zzz_z \end{bmatrix}$$

be the Z_b down rotation circle data after scale factor, hard-iron and soft-iron correction.

Equation 38

$$w_{mx1} = \sqrt{\left(xxx_z^2 + yyy_z^2 + zzz_z^2\right)}$$

Then,

Equation 39

$$X_{3x1} = \left[H^T H\right]^{-1} H^T \cdot w$$

电话：18923720150 邮箱：2355526548@qq.com

天猫店铺网址：https://telesky.tmall.com

So the normalized rotation vector for Z_b down rotation is,

Equation 40

$$R_z = X / \sqrt{\left(X(1)^2 + X(2)^2 + X(3)^2\right)}$$

Similarly, the normalized rotation vectors R_x and R_y for X_b down rotation and Y_b down rotation can be found. Then the final misalignment compensation matrix is,

Equation 41

$$M_m_{3x3} = \begin{bmatrix} R_x & R_y & R_z \end{bmatrix}$$

Figure 13. After misalignment compensation

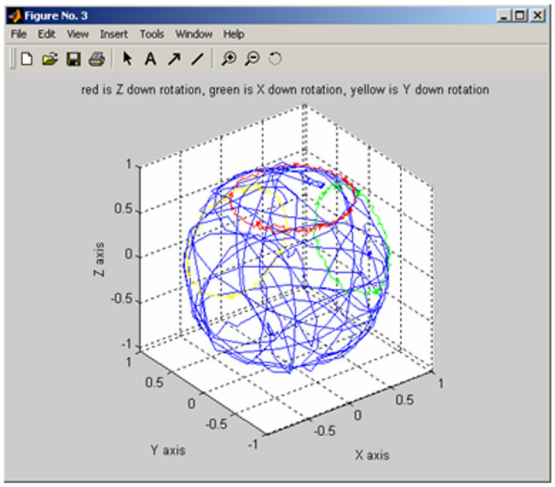

AM06787v1

电话：18923720150 邮箱：2355526548@qq.com

天猫店铺网址：https://telesky.tmall.com

6 References

1. STMicroelectronics, Inc. LSM303DLH sensor module datasheet
http://www.st.com/stonline/products/families/sensors/motion_sensors/lsm303dlh.htm
2. Honeywell, Inc. Applications of Magnetoresistive Sensors in Navigation Systems
http://www.ssec.honeywell.com/position-sensors/datasheets/sae.pdf
3. Honeywell, Inc. Applications of Magnetic Sensors for Low Cost Compass Systems
http://www.ssec.honeywell.com/magnetic/datasheets/lowcost.pdf

电话：18923720150 邮箱：2355526548@qq.com

天猫店铺网址：https://telesky.tmall.com

7 Revision history

Table 3. Document revision history

Date	Revision	Changes
02-Aug-2010	1	Initial release.

电话：18923720150 邮箱：2355526548@qq.com

天猫店铺网址：https://telesky.tmall.com

电话：18923720150 邮箱：2355526548@qq.com