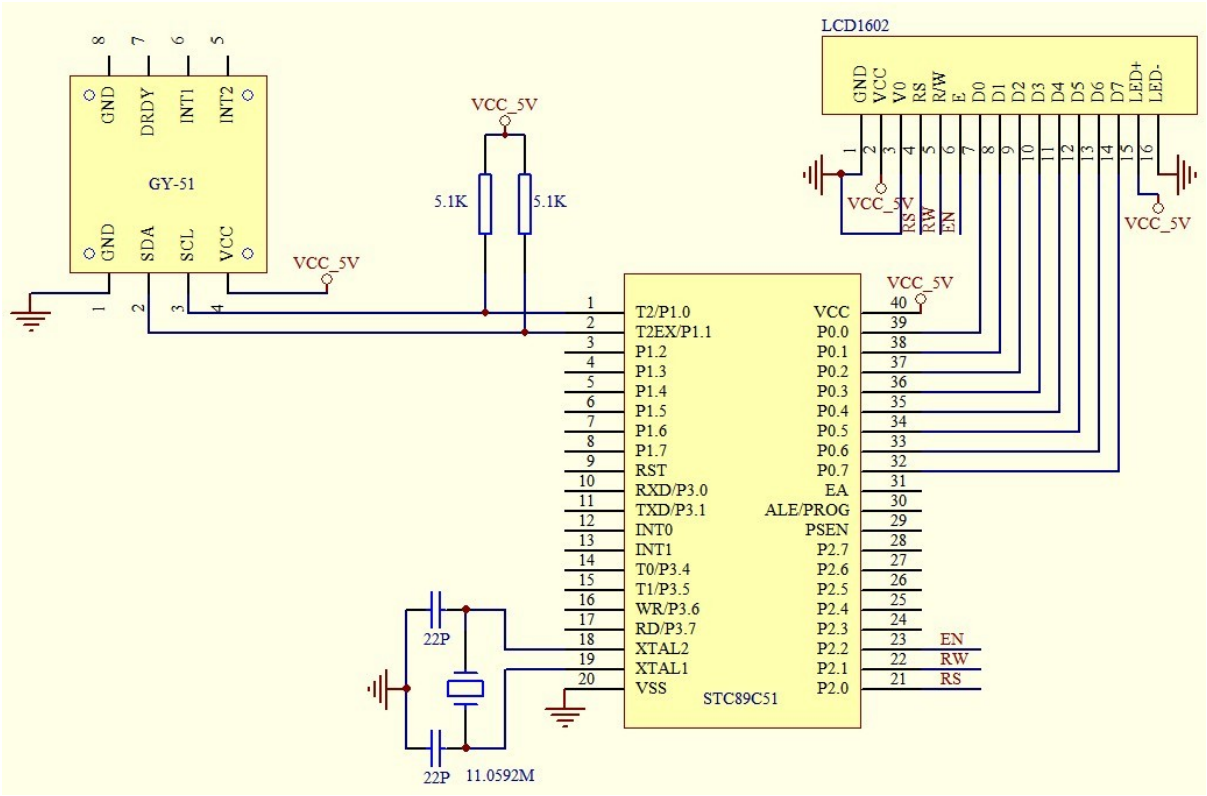
GY-51
GND
DRDY
INT1
INT2
GND
SDA
SCL
VCC
VCC_5V
5.1K
5.1K
LCD1602
GND
VCC
V0
RS
R/W
E
D0
D1
D2
D3
D4
D5
D6
D7
LED+
LED-
STC89C51
T2/P1.0
T2EX/P1.1
P1.2
P1.3
P1.4
P1.5
P1.6
P1.7
RST
RXD/P3.0
TXD/P3.1
INT0
INT1
T0/P3.4
T1/P3.5
WR/P3.6
RD/P3.7
XTAL2
XTAL1
VSS
VCC
P0.0
P0.1
P0.2
P0.3
P0.4
P0.5
P0.6
P0.7
EA
ALE/PROG
PSEN
P2.7
P2.6
P2.5
P2.4
P2.3
P2.2
P2.1
P2.0
EN
RW
RS
22P
22P
11.0592M