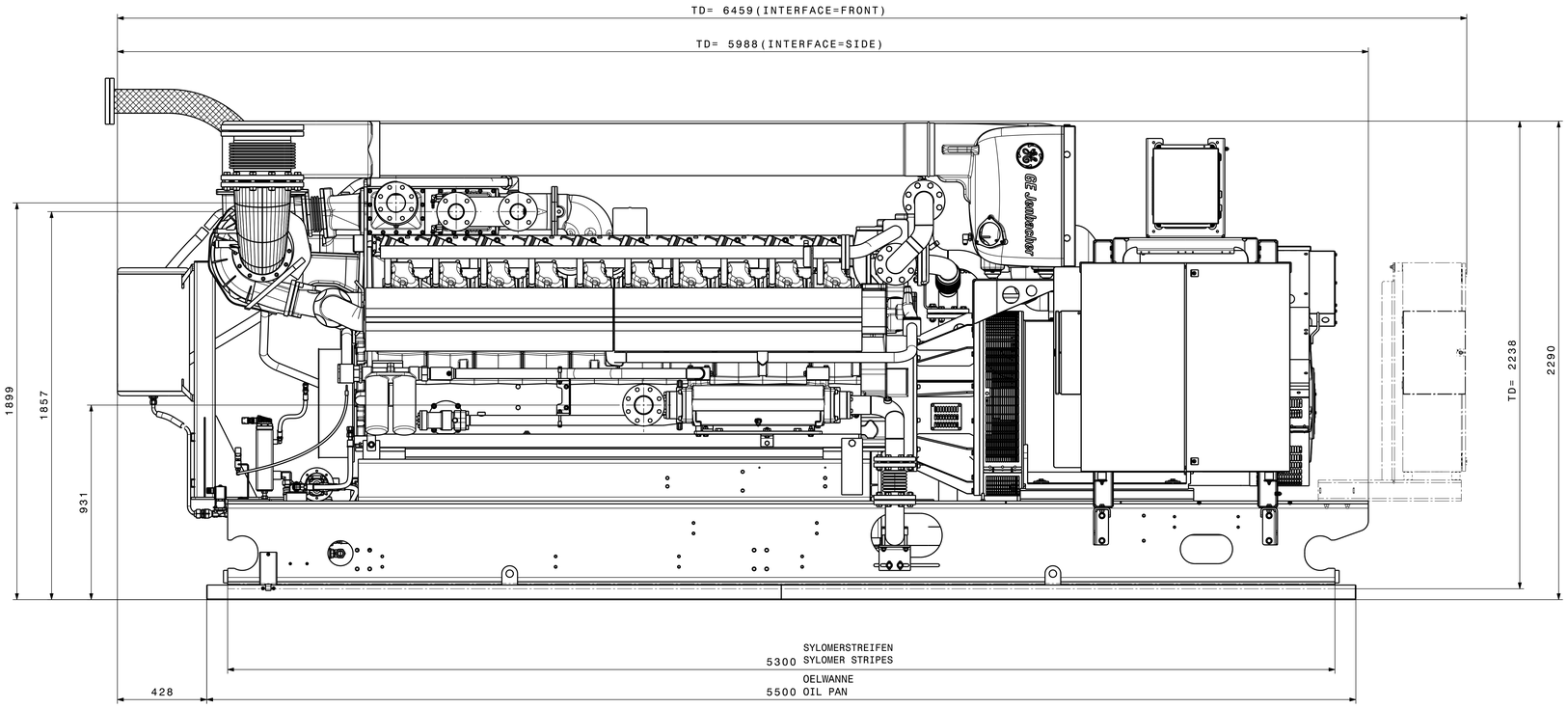

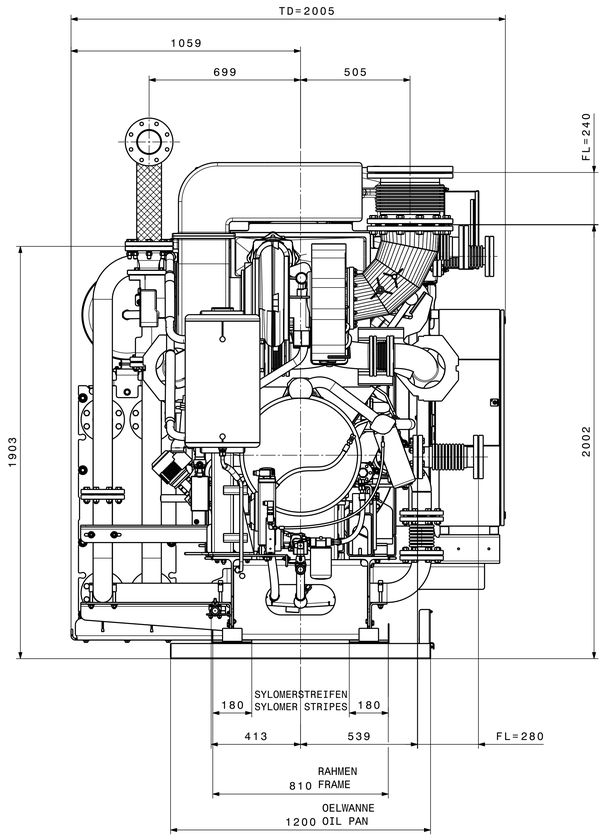

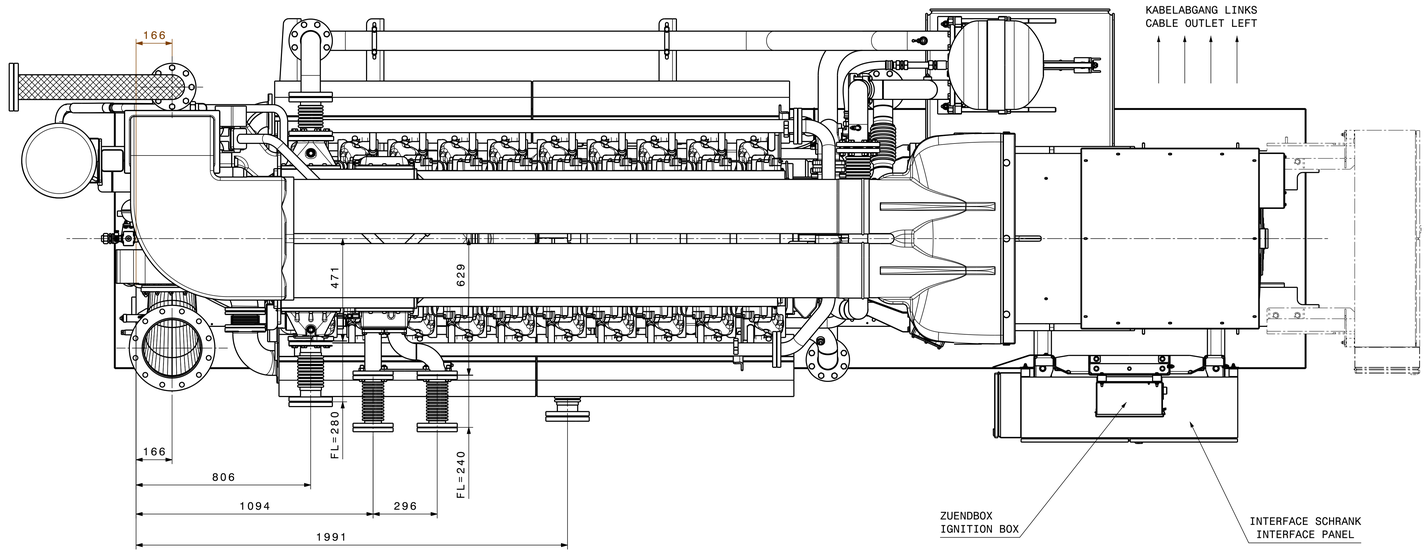

ANSCHLUSS CONNECTION	DN	PN	ROHR Ø PIPE Ø
A	80	10	88,9
B	80	10	88,9
C	250	10	273,0
D	100	16	114,3
E			1/2"
G			1 1/2"
I			28
J			28
L			13
M	65	10	76,1
N	65	10	76,1
V			

GEWICHT/WEIGHT	
$M_{ges\ tr}$	11100 KG
$M_{ges\ gf}$	11600 KG
$M_{mot\ tr}$	5200 KG
$M_{mot\ gf}$	5700 KG
M_{gen}	3300 KG

LACKIERUNG/PAINTING	
L_{mot}	RAL 6018
L_{gen}	RAL 6018
L_{fra}	RAL 6018

FL ... EINBAULAENGE
FITTING LENGTH
TD ... TRANSPORTABMESSUNGEN
TRANSPORT DIMENSION

ONLY FOR INFORMATION

LEGENDE SIEHE
E 16287 XX
LEGEND SEE

E 16287

STANDARD UNIT 50Hz

JMS 320 GS

TECHNISCHE DATEN SIEHE TECHN. SCHEMA UND ENERGIEBILANZ
FOR TECHNICAL DATA SEE TECHNICAL DIAGRAM AND ENERGY BALANCE

ISO 13920
ISO 2768 mK-E
DIN 6930
ISO 9013

Erstellt/Geprüft nach: Created/checked according to		Passend Fitting/Used dimension	Hard or soft	Stand Index	Anzahl Incl.	Änderung Nr. Update number	Datum Date	Name Name	geprüft Checked
	Datum Date	Name/Gruppe Name/group							
Gez. Drawn	14-12-2015	kalbursa / India							
Gepr. Checked	12-01-2016	heinschd							

geschweisste, hart- und weichgelötete Verbindungen: Symboldarstellung: ISO 2553
welded, brazed, soldered joints - symbolic representation: ISO 2553

Toleranzen von Form, Richtung, Ort und Lauf: DIN ISO 1101
Tolerances of form, orientation, location and run-out: DIN ISO 1101

Tolerierungsgrundsatz: DIN ISO 14405
Tolerancing principle: DIN ISO 14405

Ers.für repl.for
Ers.durch repl.by

Werkstoff/material

Werkstückkanten ISO 13715
workpiece edges ISO 13715
Oberflächenbeschaffenheit: DIN ISO 1302
surface condition: DIN ISO 1302

Massstab scale: 1:10 | Gewicht weight | Blatt Nr./Blattanz. Sheet nr./Sheets: 1 / 2 | A0

nach 92_JB9001
acc. to H1_JB9001

The information contained in this document is General Electric's (GE) property and may be kept or used only with GE's permission or in accordance with the terms of GE and which has been furnished to GE subject to confidentiality or otherwise protected by law. Subject to any GE rights, including, but without limitation, rights in patents, copyrights, trade secrets and trademarks, no ownership, development, or derivation of any rights, modifications, improvements, derivatives, or other intellectual property in or to this document shall be created or vested in GE or its or GE's licensees or suppliers by this document or any part thereof.
Upon GE's or such rightsholder's request or if not part of a GE contract, this document must be returned to GE.
Copyright, General Electric Company, 2016

Benennung/title
Aggregatzeichnung
Unit drawing

GE Jenbacher

ZGNr. drawno. E17459 320 50 01
Werk Plant | Jahr Year | Produktgruppe Sub-assembly | Folgenummer Consecutive | Überlnummer Issue number | Buchst. Suffix

TLNr. partno. J3205001

*Anfertigung nach ISO 9000 beachten!
*Respect the production note ISO 9000!

Weitergabe und Ausnutzung überrechtlicher Bekanntmachungen untersagen
Passing on and exploitation of unauthorised disclosures
Unauthorised when printed or transmitted electronically

Übernommen aus:/originated from:

CATIA - ZEICHNUNG
System ID: BMA_AU_283