Implementation of Lexical Analysis

CS143

Lecture 4

Instructor: Fredrik Kjolstad

Slide design by Prof. Alex Aiken, with modifications

Written Assignments

- WA1 assigned today

- Due in one week
  - 11:59pm
  - Electronic hand-in on Gradescope

Tips on Building Large Systems

- KISS (Keep It Simple, Stupid!)
- Don’t optimize prematurely
- Design systems that can be tested
- It is easier to modify a working system than to get a system working

Value simplicity

“It's not easy to write good software. […] it has a lot to do with valuing simplicity over complexity.”
- Barbara Liskov

“There are two ways of constructing a software design: One way is to make it so simple that there are obviously no deficiencies, and the other way is to make it so complicated that there are no obvious deficiencies. The first method is far more difficult.”
- Tony Hoare

“Simplicity does not precede complexity, but follows it.”
- Alan Perlis

“Debugging is twice as hard as writing the code in the first place. Therefore, if you write the code as cleverly as possible, you are, by definition, not smart enough to debug it.”
- Brian Kernighan

Outline

- Specifying lexical structure using regular expressions
- Finite automata
  - Deterministic Finite Automata (DFAs)
  - Non-deterministic Finite Automata (NFAs)
- Implementation of regular expressions

Convert Lexical Specification to Implementation

- High-level sketch

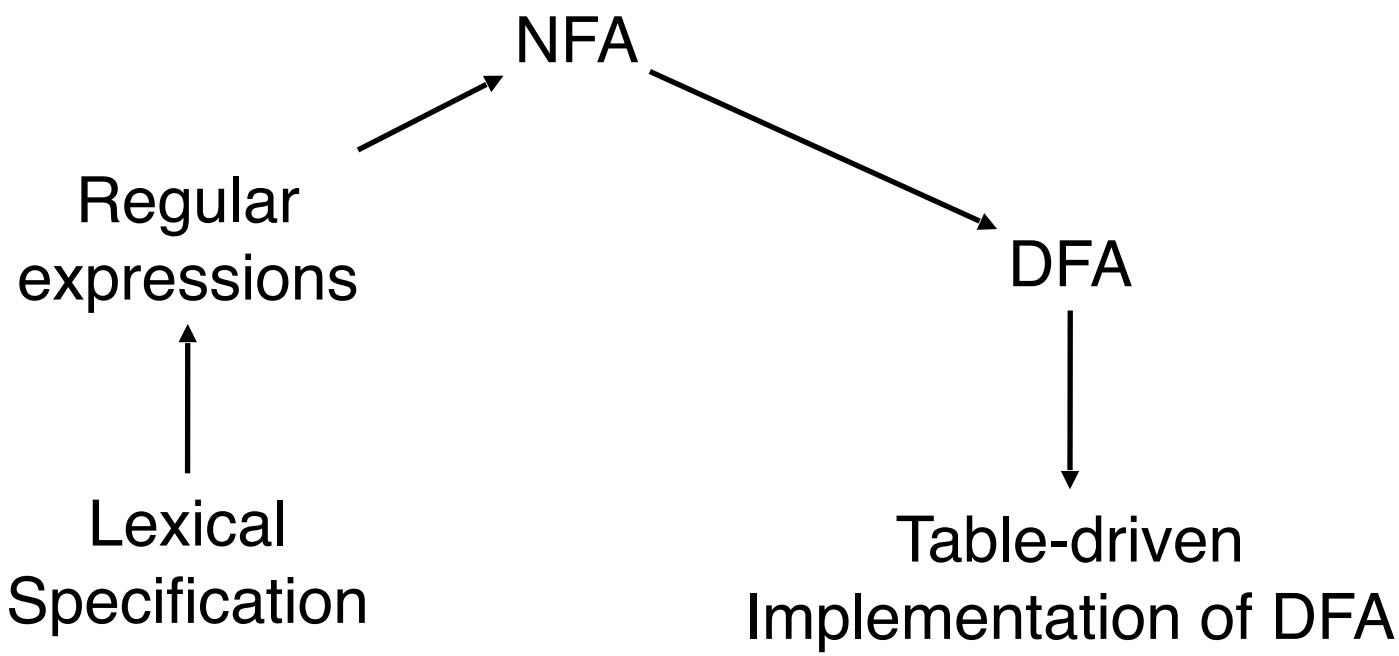

Notation

- There is variation in regular expression notation

- Union: A + B ≡ A | B
- Option: A + ε ≡ A?
- Range: ‘a’+’b’+…+’z’ ≡ [a-z]
- Excluded range:
  complement of [a-z] ≡ [^a-z]

Regular Expressions in Lexical Specification

- Last lecture: a specification for the predicate

$$s \in L(R)$$

- But a yes/no answer is not enough!
- Instead: partition the input into tokens

- We will adapt regular expressions to this goal

Lexical Specification → Regex in five steps

1. Write a regex for each token
   - Number = digit +
   - Keyword = ‘if’ + ‘else’ + …
   - Identifier = letter (letter + digit)*
   - OpenPar = ‘(‘
   - …

Lexical Specification → Regex in five steps

2. Construct R, matching all lexemes for all tokens

$$R = \text{Keyword} + \text{Identifier} + \text{Number} + \ldots$$
$$= R_1 + R_2 + \ldots$$

Lexical Specification → Regex in five steps

3. Let input be $x_1 \ldots x_n$

   For $1 \leq i \leq n$ check

   $$x_1 \ldots x_i \in L(R)$$

4. If success, then we know that

   $x_1 \ldots x_i \in L(R_j)$ for some j

5. Remove $x_1 \ldots x_i$ from input and go to (3)

Ambiguity 1

- There are ambiguities in the algorithm

- How much input is used? What if
  - $x_1 \ldots x_i \in L(R)$ and also
  - $x_1 \ldots x_k \in L(R)$

- Rule: Pick longest possible string in $L(R)$
  - Pick k if $k > i$
  - The "maximal munch"

Ambiguity 2

- Which token is used? What if
  - $x_1 \ldots x_i \in L(R_j)$ and also
  - $x_1 \ldots x_i \in L(R_k)$

- Rule: use rule listed first
  - Pick j if $j < k$
  - E.g., treat "if" as a keyword, not an identifier

Error Handling

- What if
  No rule matches a prefix of input ?

- Problem: Can't just get stuck …

- Solution:
  – Write a rule matching all "bad" strings
  – Put it last (lowest priority)

Summary

- Regular expressions provide a concise notation for string patterns

- Use in lexical analysis requires small extensions
  - To resolve ambiguities
  - To handle errors

- Good algorithms known
  - Require only single pass over the input
  - Few operations per character (table lookup)

Finite Automata

- Regular expressions = specification
- Finite automata = implementation

- A finite automaton consists of
  - An input alphabet Σ
  - A set of states S
  - A start state n
  - A set of accepting states $F \subseteq S$
  - A set of transitions $\text{state} \xrightarrow{\text{input}} \text{state}$

Finite Automata

- Transition

$$s_1 \rightarrow^a s_2$$

- Is read

  In state s_1 and see input "a", then go to state s_2

- If end of input and in accepting state => accept

- Otherwise => reject

Finite Automata State Graphs

- A state

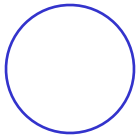

- The start state

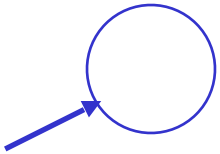

- An accepting state

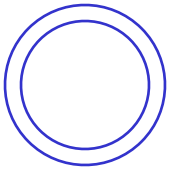

- A transition

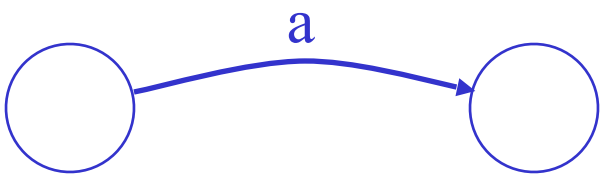

A Simple Example

- A finite automaton that accepts only “1”

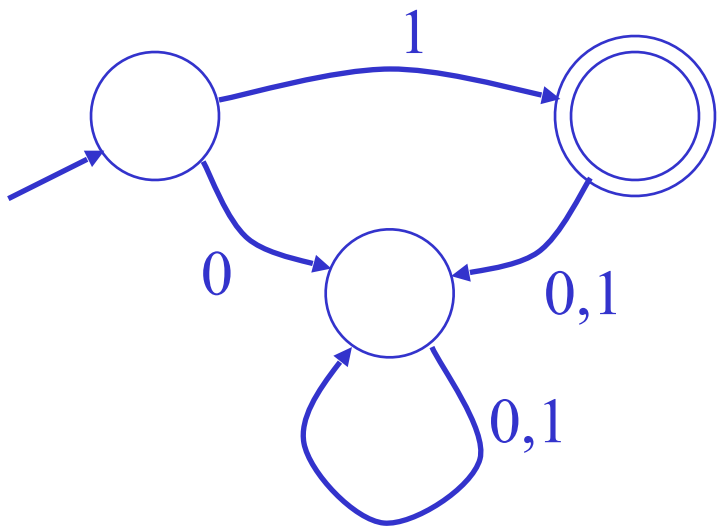

Another Simple Example

- A finite automaton accepting any number of 1's followed by a single 0
- Alphabet: {0,1}

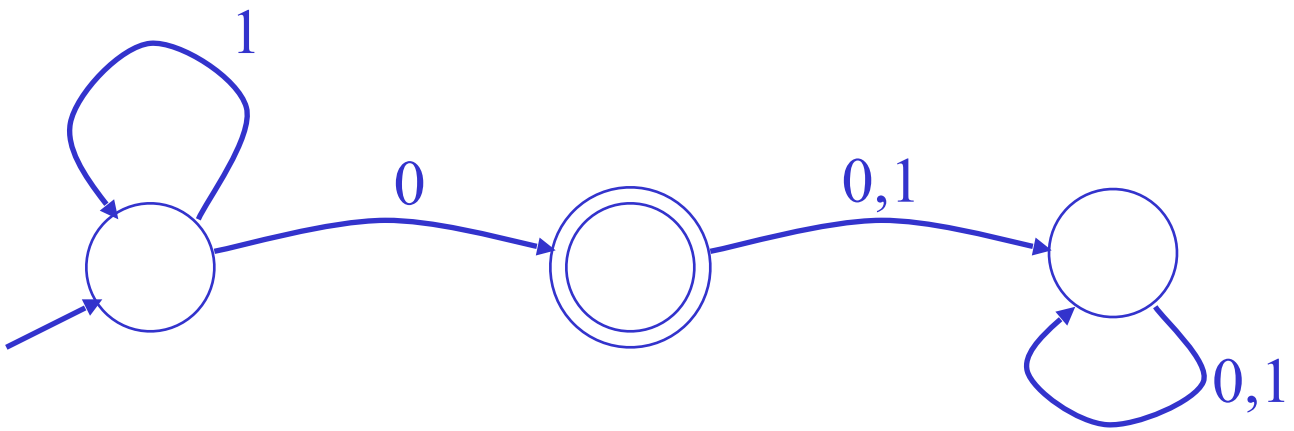

And Another Example

- Alphabet {0,1}
- What language does this recognize?

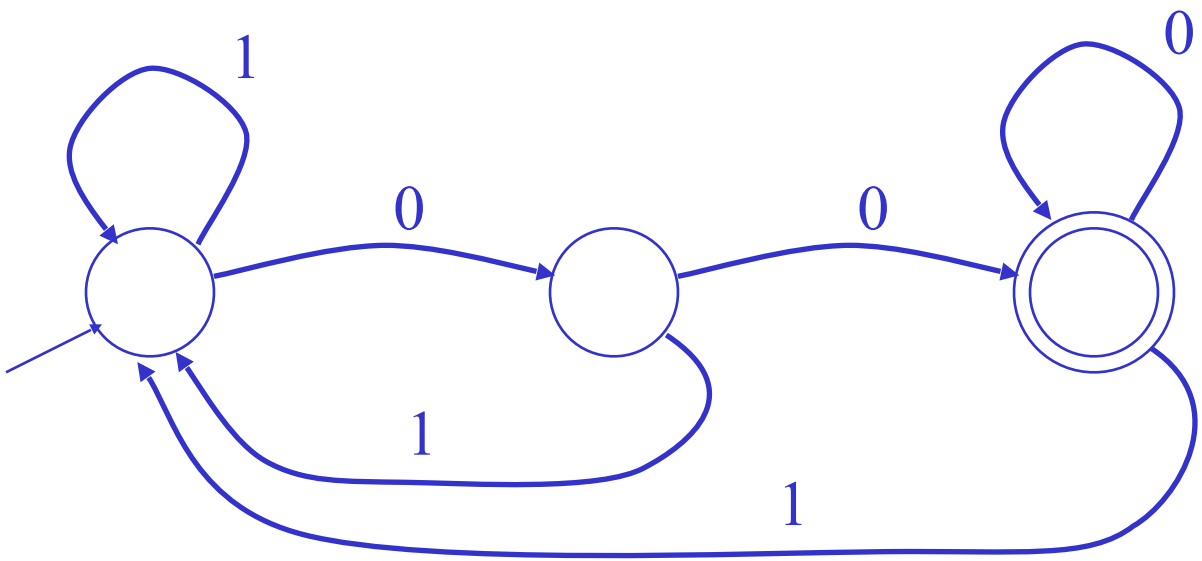

Epsilon Moves in NFAs

- Another kind of transition: ε-moves

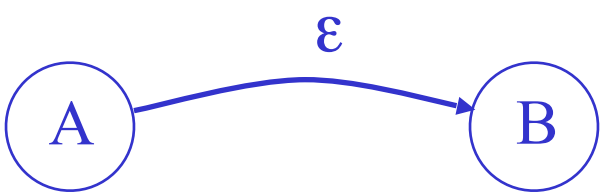

- Machine can move from state A to state B without reading input

- Only exist in NFAs

Deterministic and Nondeterministic Automata

- Deterministic Finite Automata (DFA)
  - Exactly one transition per input per state
  - No ε-moves

- Nondeterministic Finite Automata (NFA)
  - Can have zero, one, or multiple transitions for one input in a given state
  - Can have ε-moves

Execution of Finite Automata

- A DFA can take only one path through the state graph
  - Completely determined by input

- NFAs can choose
  - Whether to make ε-moves
  - Which of multiple transitions for a single input to take

Acceptance of NFAs

- An NFA can get into multiple states

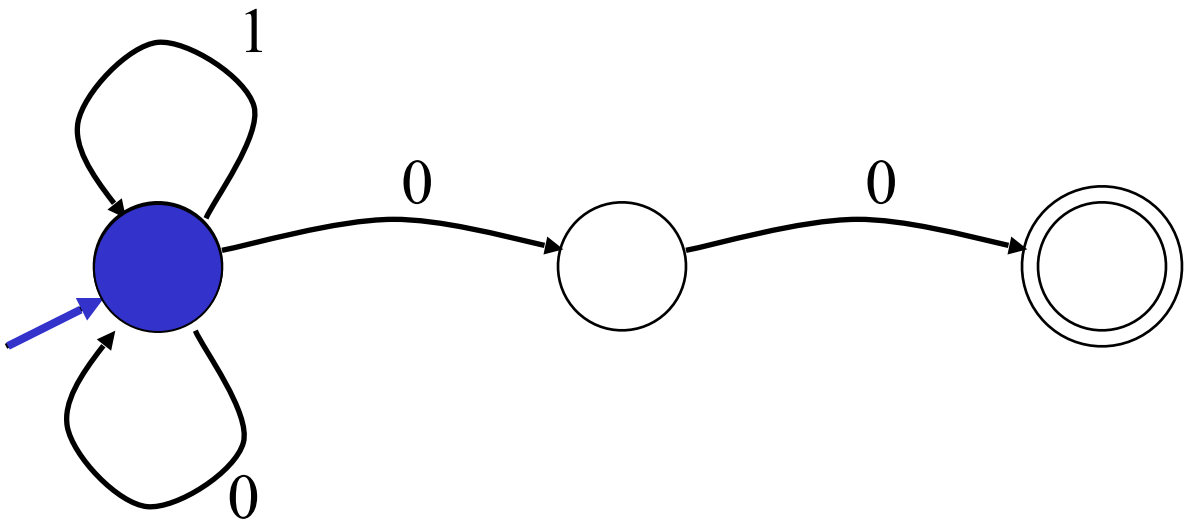

- Input:

Acceptance of NFAs

- An NFA can get into multiple states

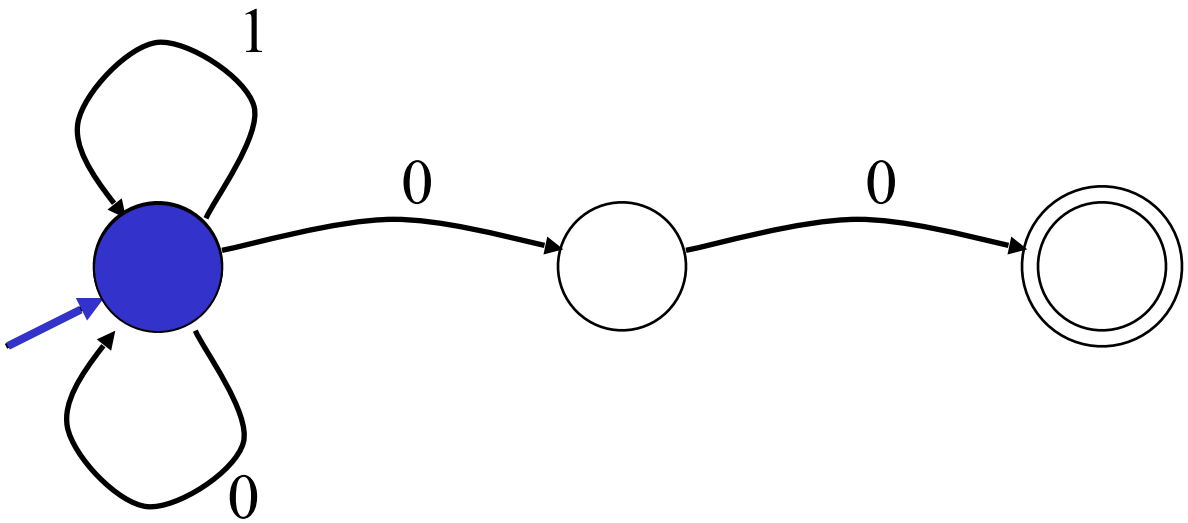

- Input: 1

Acceptance of NFAs

- An NFA can get into multiple states

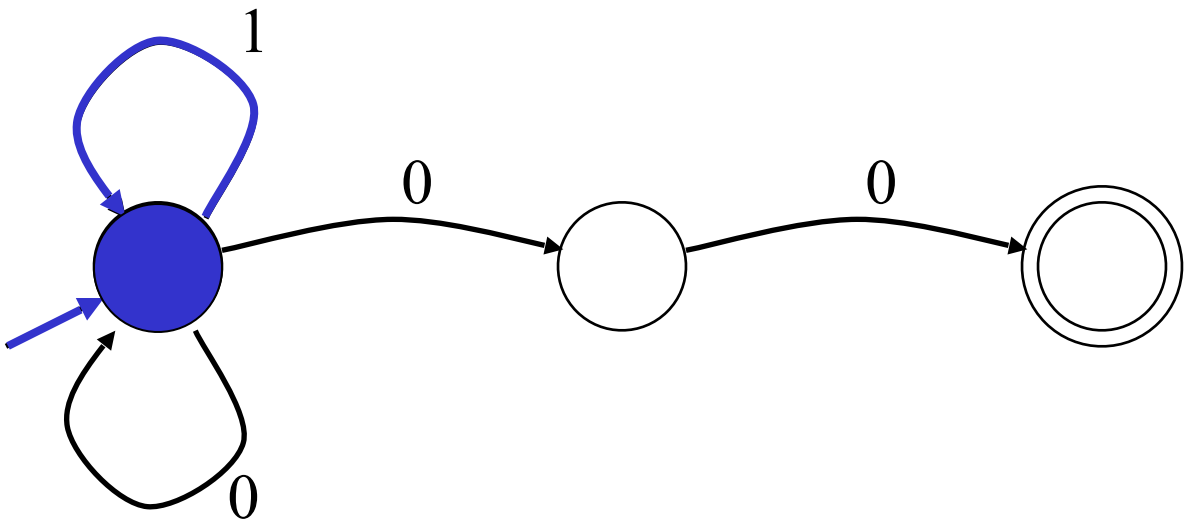

- Input: 1

Acceptance of NFAs

- An NFA can get into multiple states

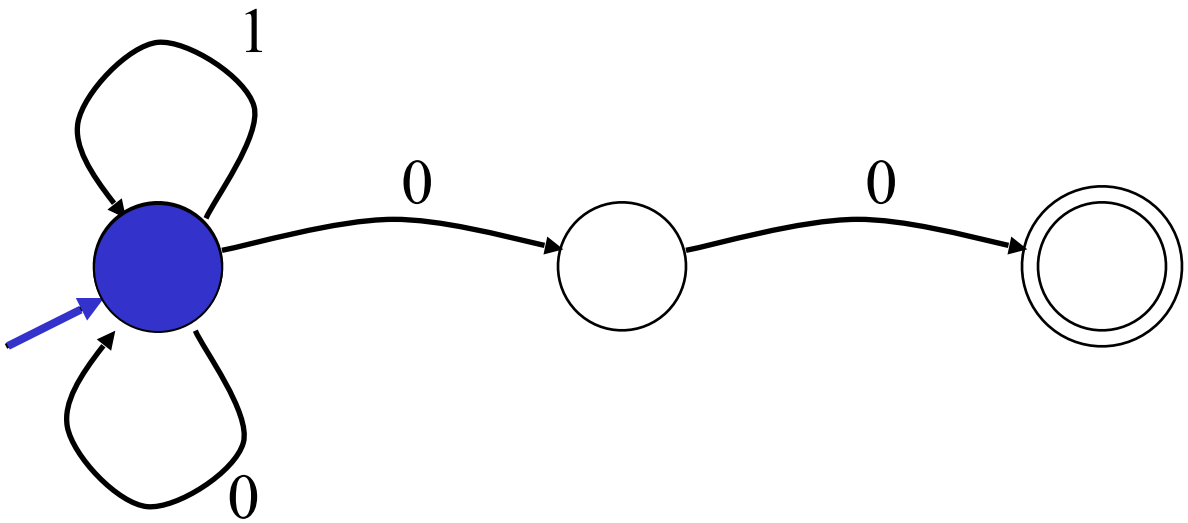

- Input: 1 0

Acceptance of NFAs

- An NFA can get into multiple states

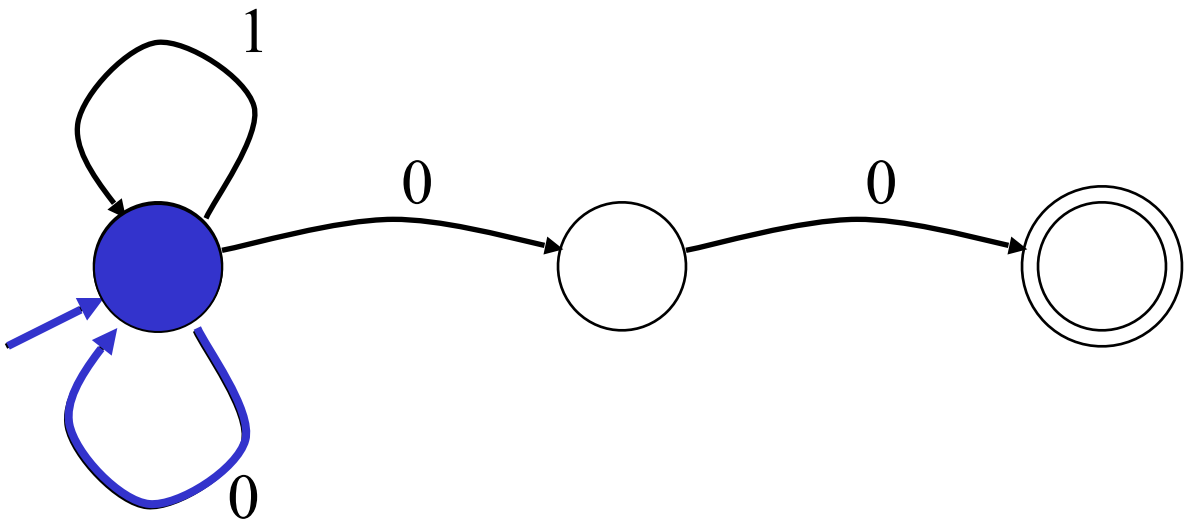

- Input: 1 0

Acceptance of NFAs

- An NFA can get into multiple states

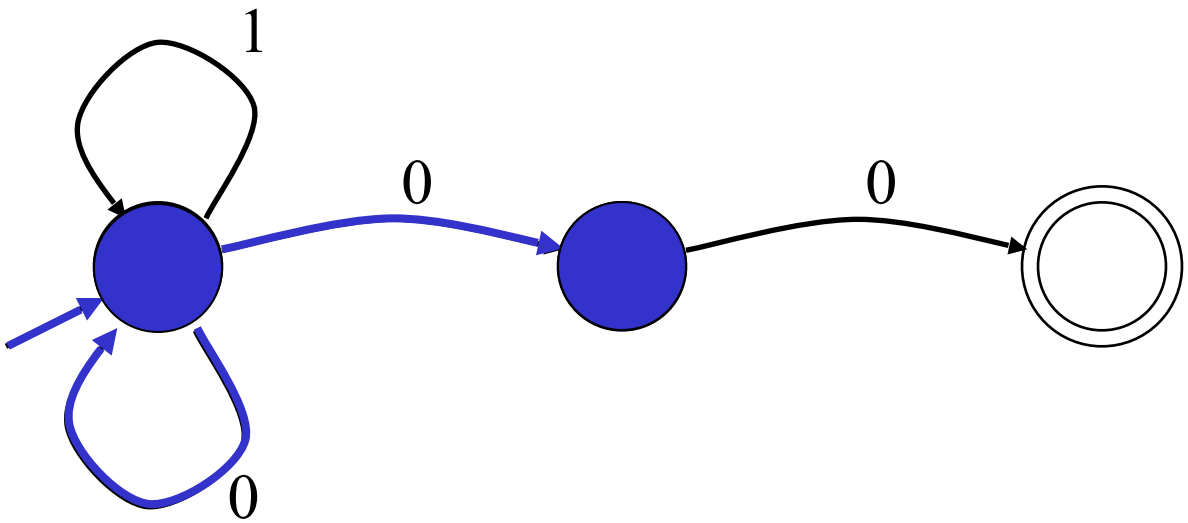

- Input: 1 0

Acceptance of NFAs

- An NFA can get into multiple states

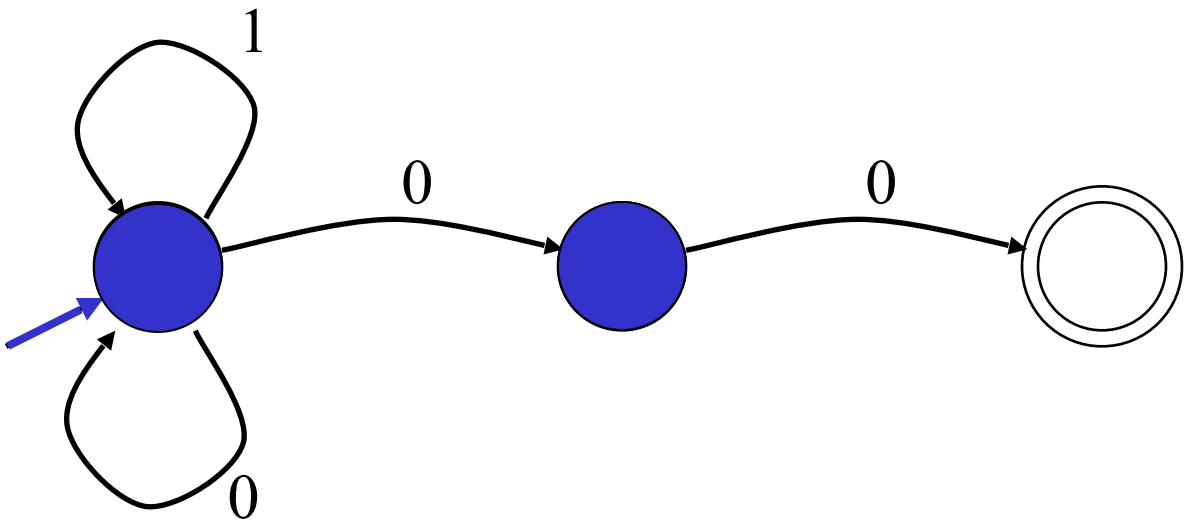

- Input: 1 0 0

Acceptance of NFAs

- An NFA can get into multiple states

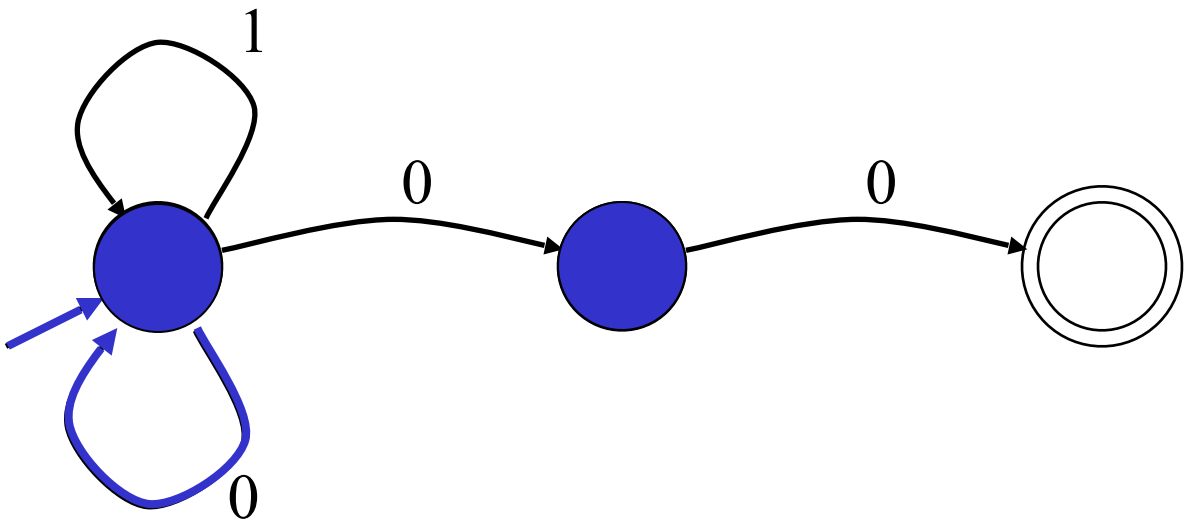

- Input: 1 0 0

Acceptance of NFAs

- An NFA can get into multiple states

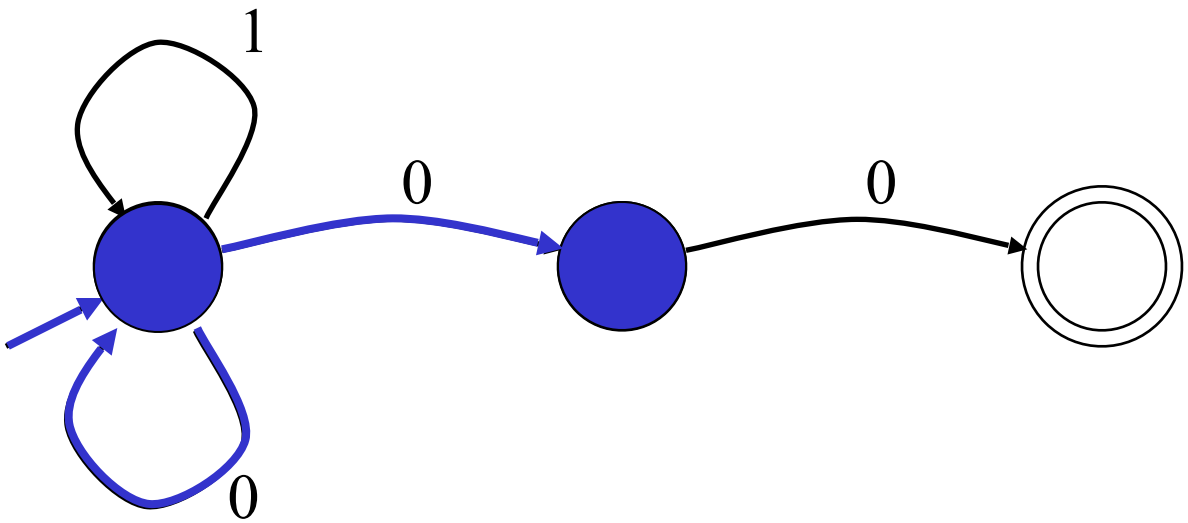

- Input: 1 0 0

Acceptance of NFAs

- An NFA can get into multiple states

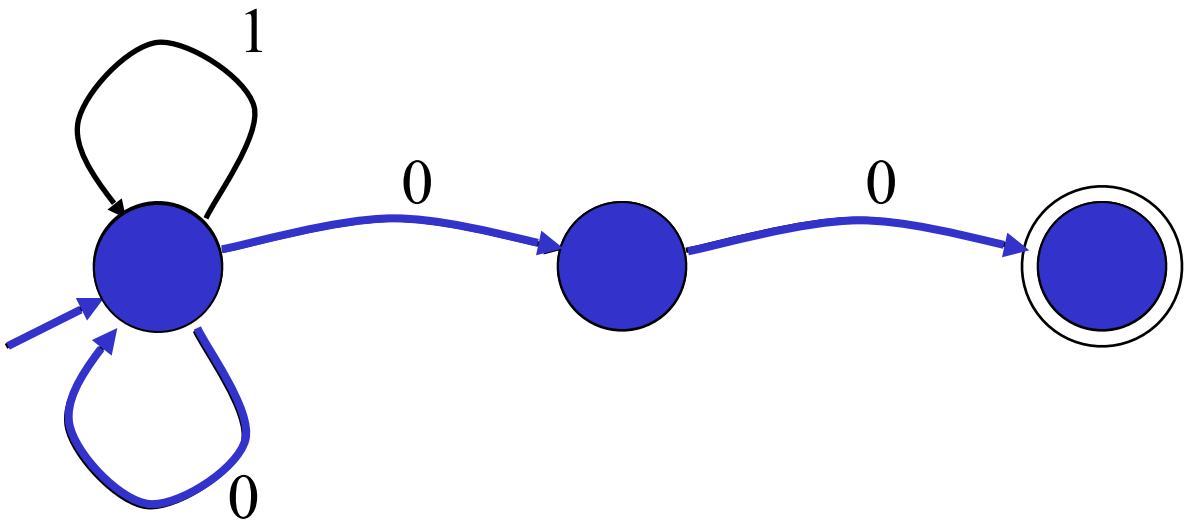

- Input: 1 0 0

Rule: NFA accepts if it <u>can</u> get to a final state

Acceptance of NFAs

- NFAs can also leave states

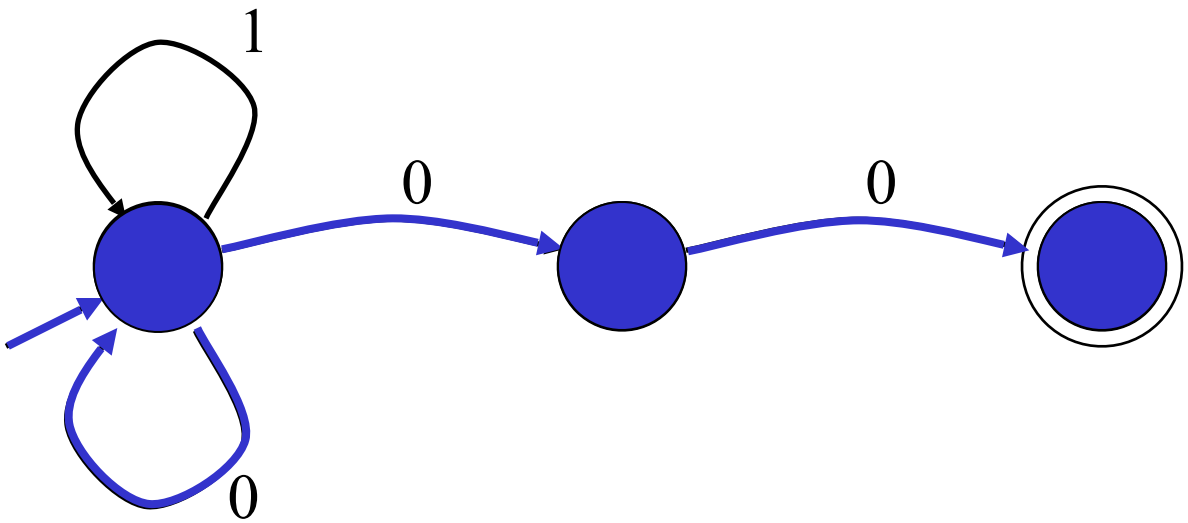

- Input: 1 0 0

Acceptance of NFAs

- NFAs can also leave states

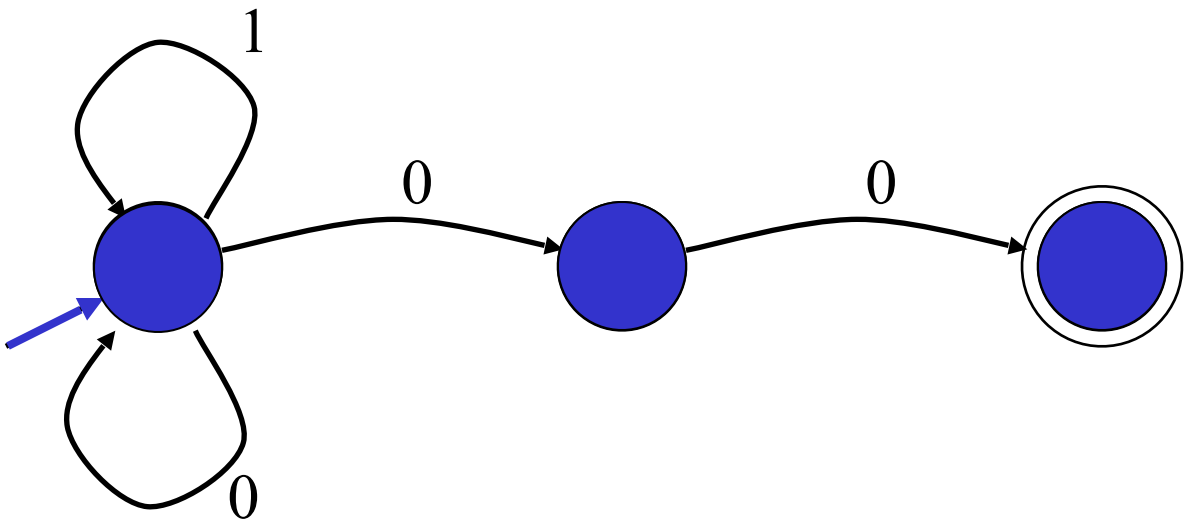

- Input: 1 0 0 1

Acceptance of NFAs

- NFAs can also leave states

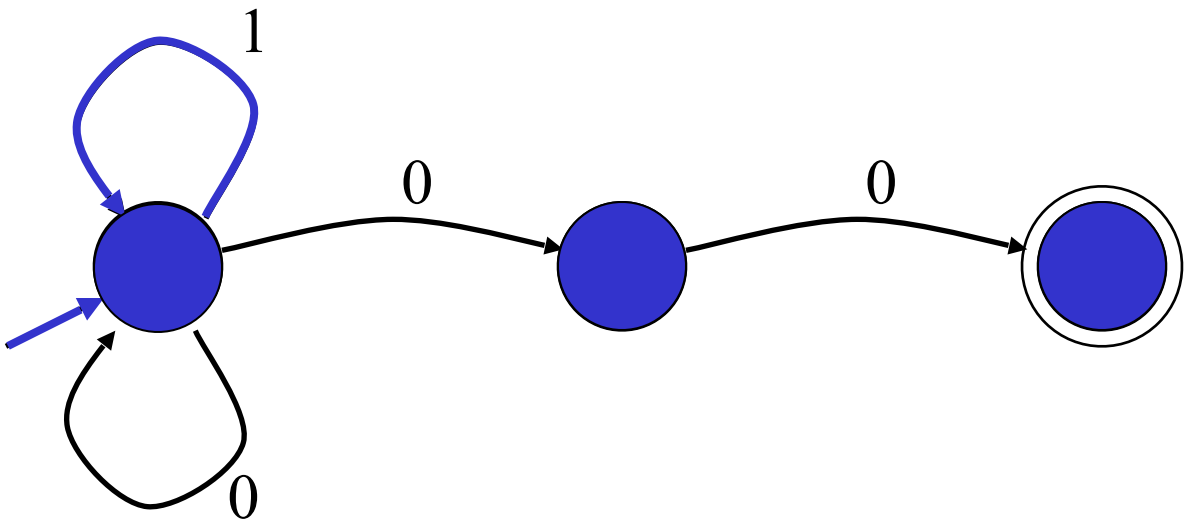

- Input: 1 0 0 1

Acceptance of NFAs

- NFAs can also leave states

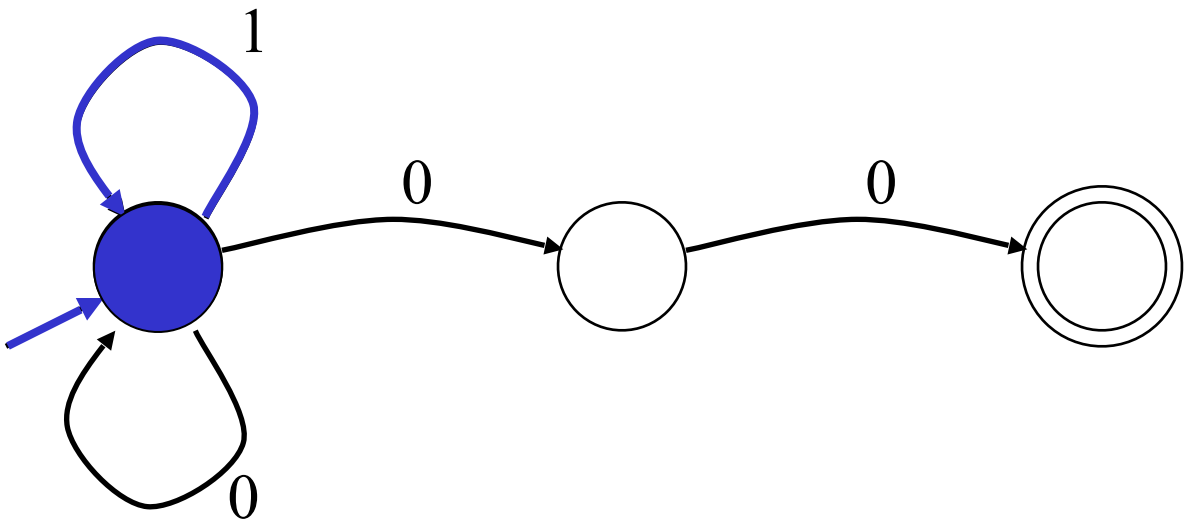

- Input: 1 0 0 1

NFA vs. DFA (1)

- NFAs and DFAs recognize the same set of languages (regular languages)

NFA vs. DFA (1)

- NFAs and DFAs recognize the same set of languages (regular languages)

- DFAs are faster to execute
  - There are no choices to consider

NFA vs. DFA (2)

- For a given language NFA can be simpler than DFA

NFA

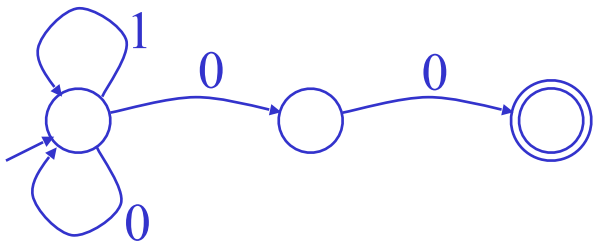

DFA

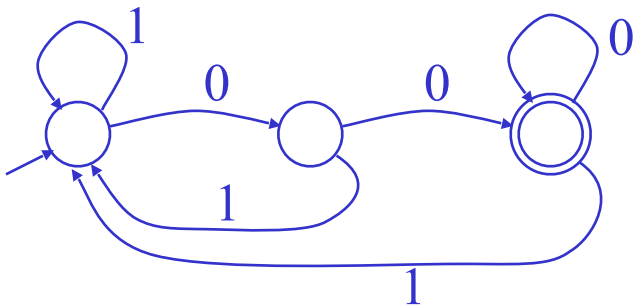

- DFA can be exponentially larger than NFA

Convert Regular Expressions to NFA (1)

- For each kind of rexp, define an NFA
  - Notation: NFA for rexp M

- For ε

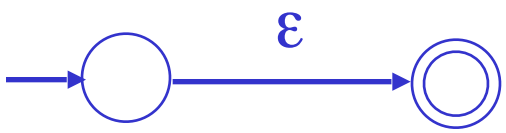

- For input a

Convert Regular Expressions to NFA (2)

- For AB

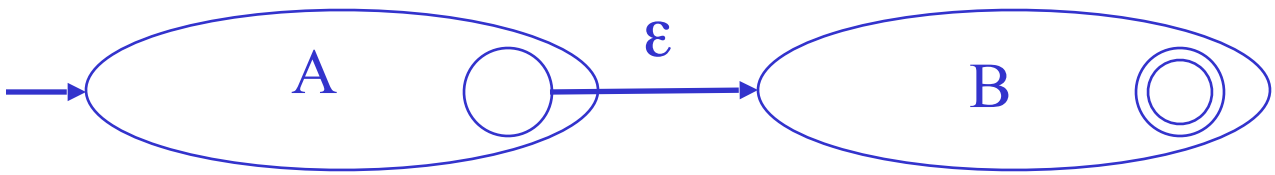

- For A + B

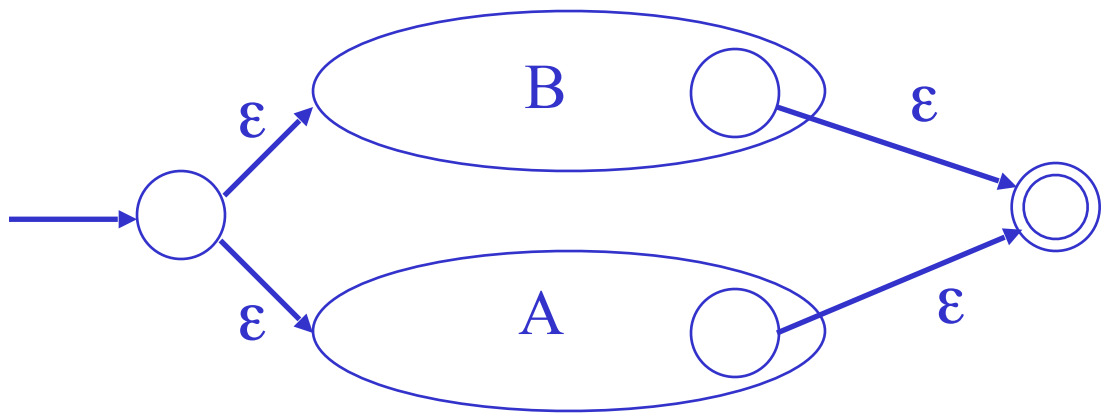

Convert Regular Expressions to NFA (3)

- For A*

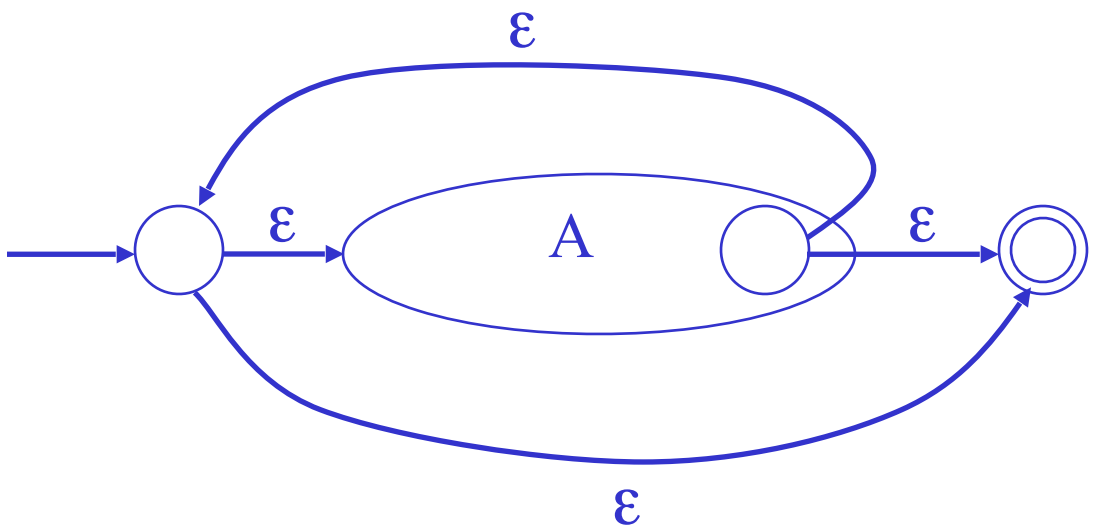

Example of RegExp to NFA conversion

- Consider the regular expression

$$(1+0)^*1$$

- The NFA is

Example of RegExp to NFA conversion

- Consider the regular expression

  (1+0)*1

- The NFA is

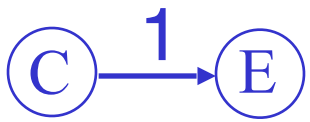

Example of RegExp to NFA conversion

- Consider the regular expression

  (1+0)*1

- The NFA is

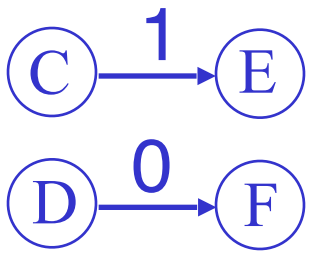

Example of RegExp to NFA conversion

- Consider the regular expression

  (1+0)*1

- The NFA is

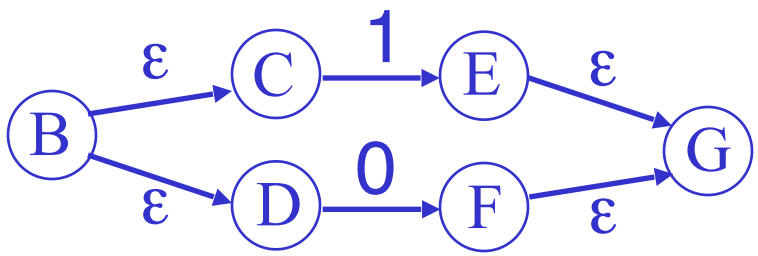

Example of RegExp to NFA conversion

- Consider the regular expression

  (1+0)*1

- The NFA is

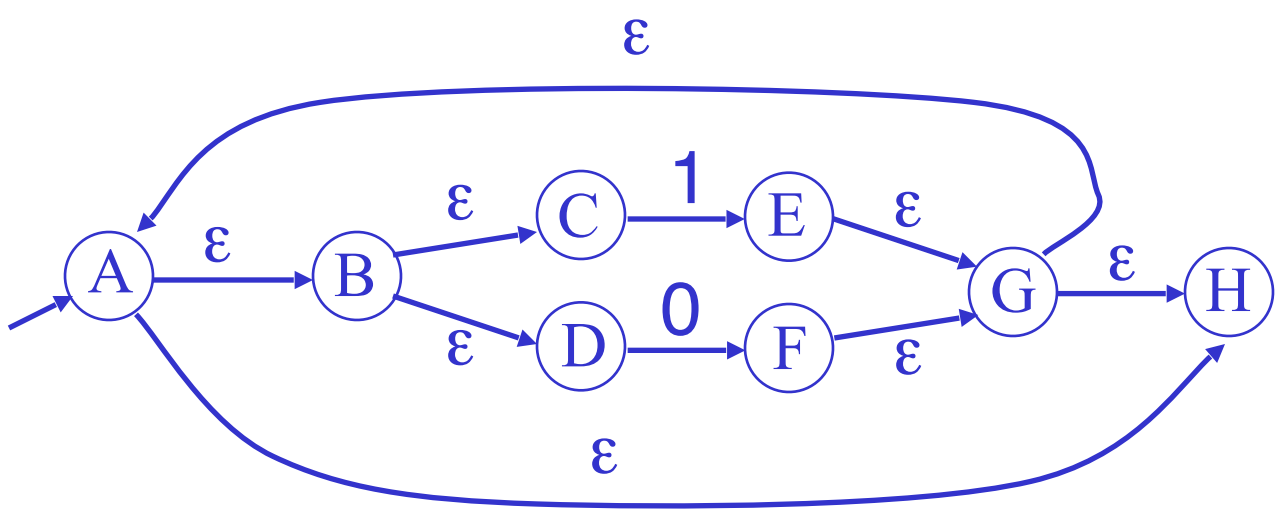

Example of RegExp to NFA conversion

- Consider the regular expression

  (1+0)*1

- The NFA is

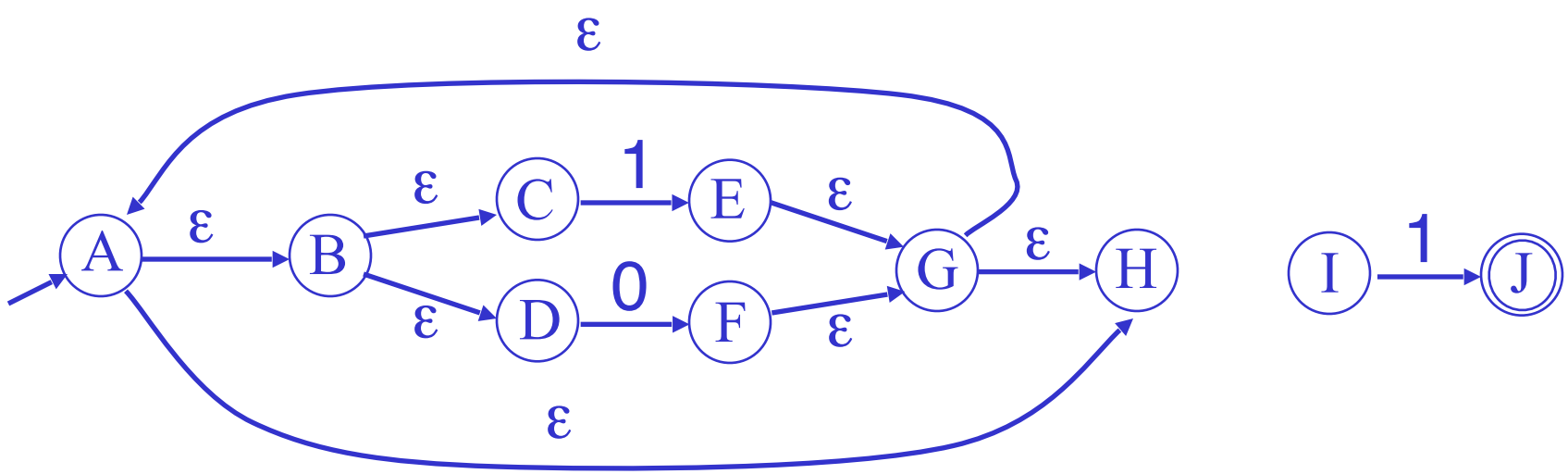

Example of RegExp to NFA conversion

- Consider the regular expression

  (1+0)*1

- The NFA is

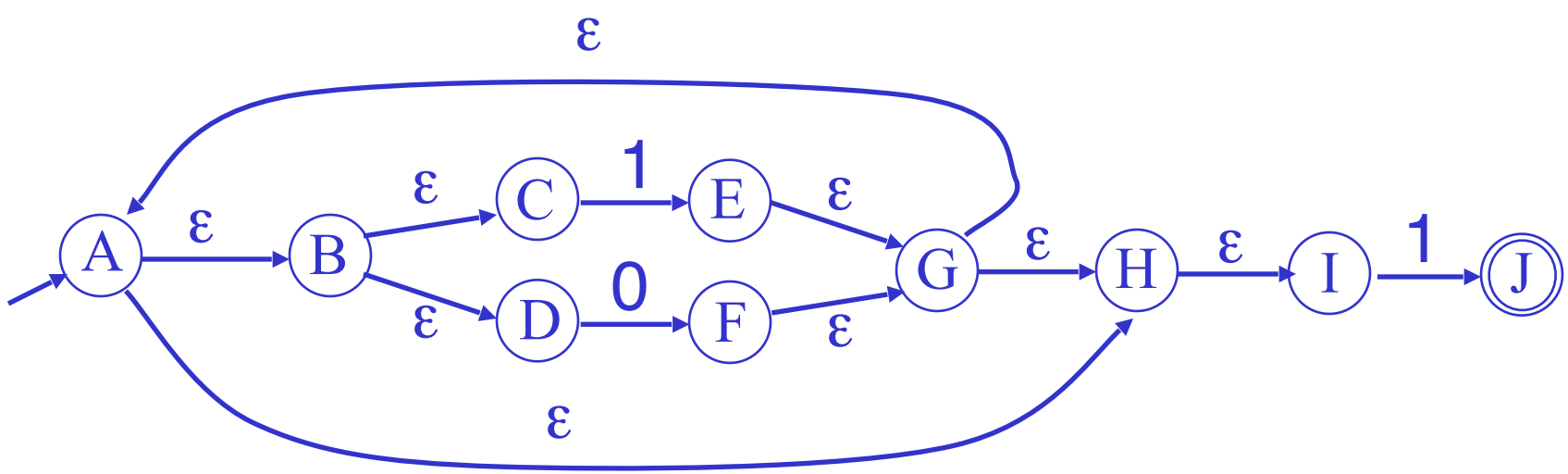

NFA to DFA: The Trick

- Simulate the NFA
- Each state of DFA
  = a non-empty subset of states of the NFA
- Start state
  = the set of NFA states reachable through ε-moves from NFA start state
- Add a transition $S \rightarrow^{a} S'$ to DFA iff
  – S' is the set of NFA states reachable from any state in S after seeing the input a, considering ε-moves as well

NFA to DFA. Remark

- An NFA may be in many states at any time
- How many different states ?
- If there are N states, the NFA must be in some subset of those N states
- How many subsets are there?
  - 2^N = finitely many

NFA -> DFA Example

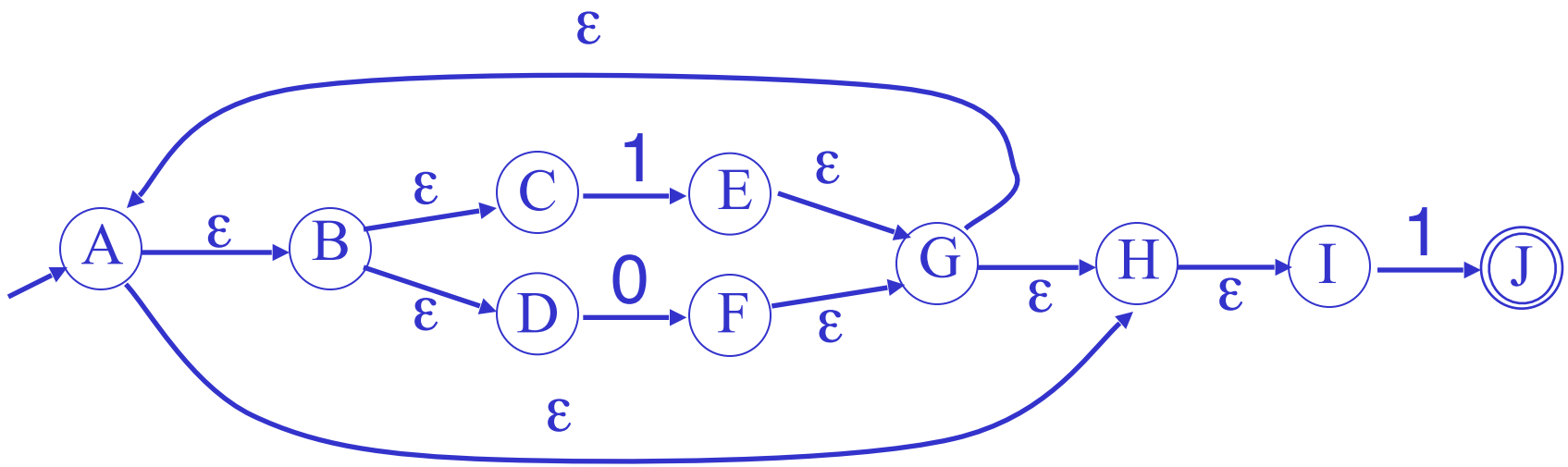

NFA -> DFA Example

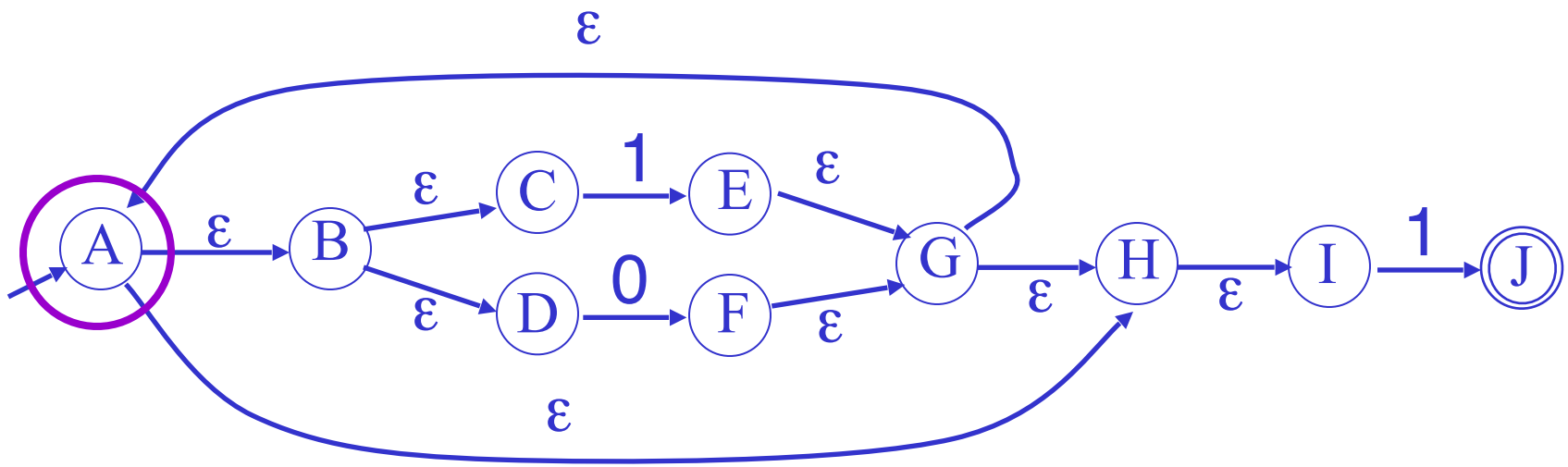

NFA -> DFA Example

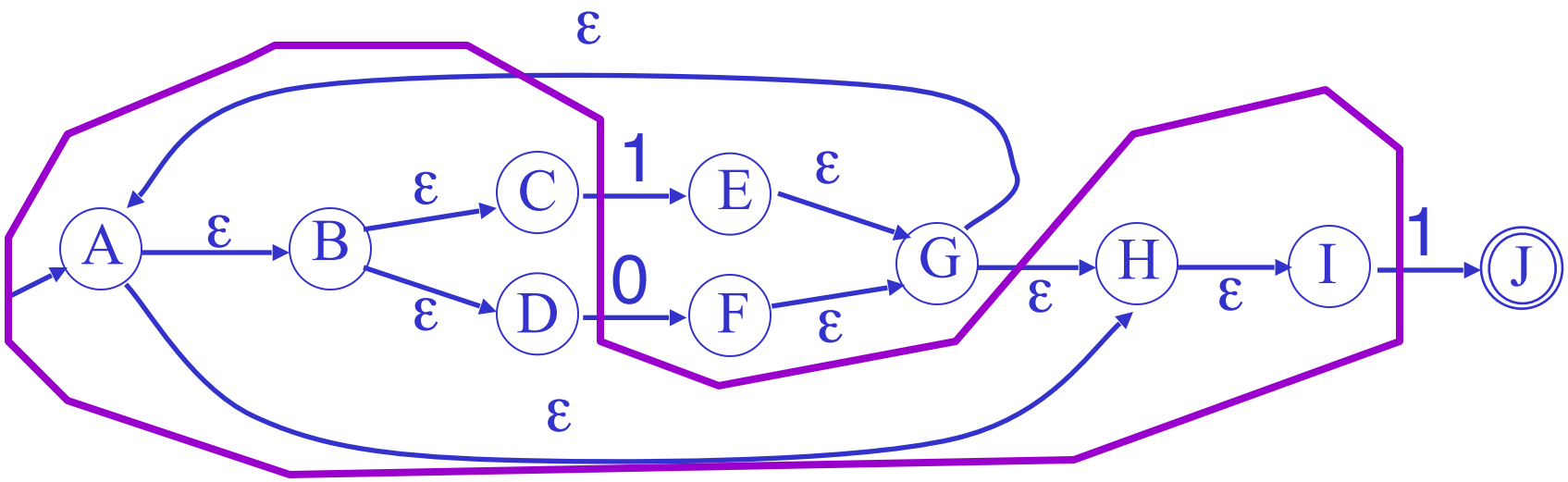

NFA -> DFA Example

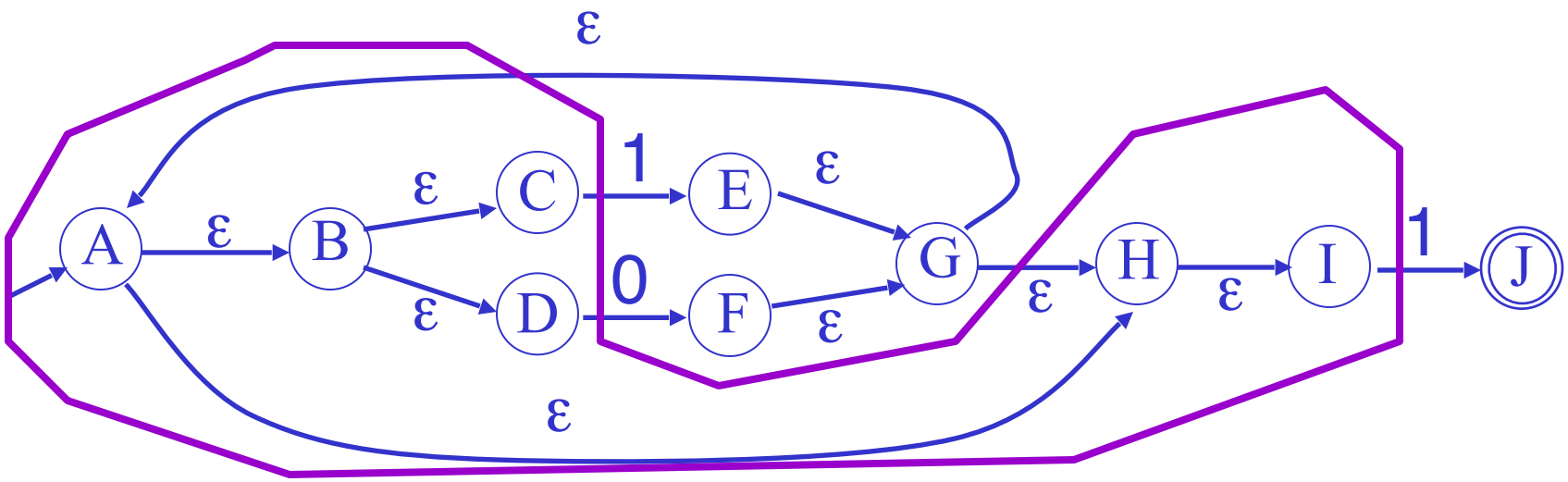

NFA -> DFA Example

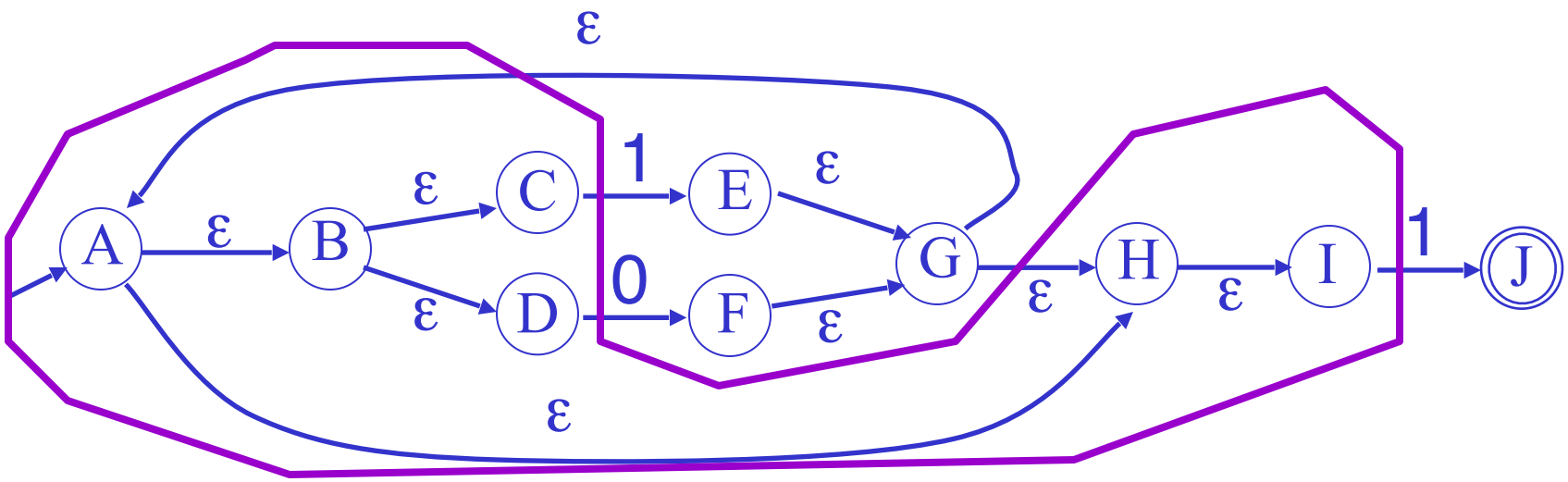

NFA -> DFA Example

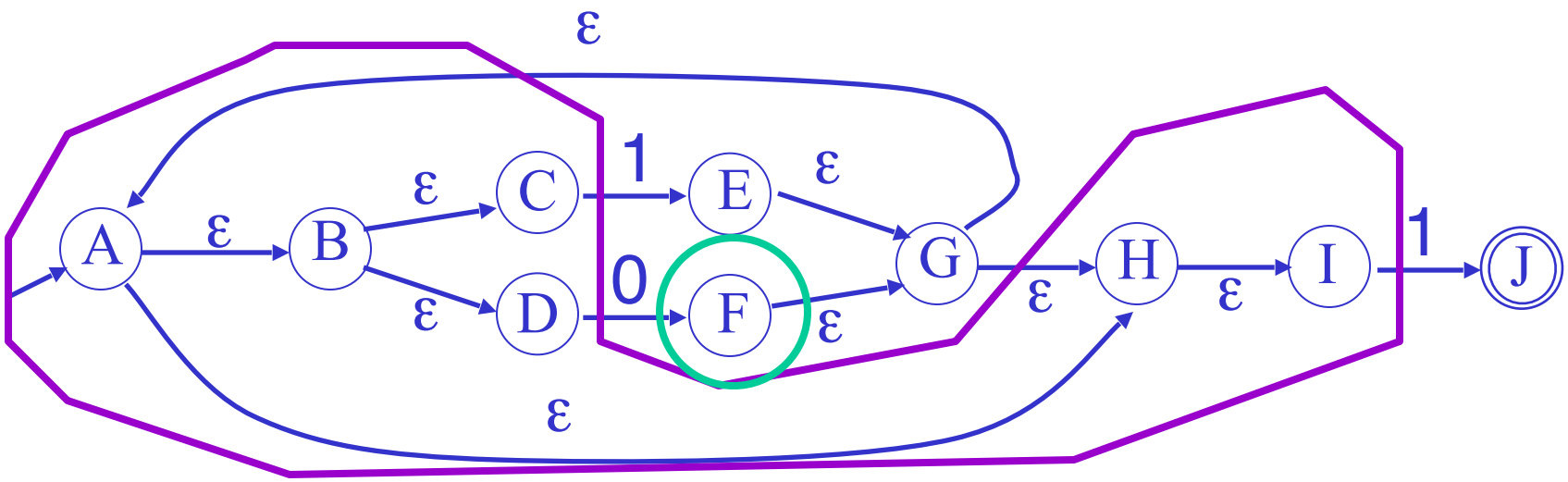

NFA -> DFA Example

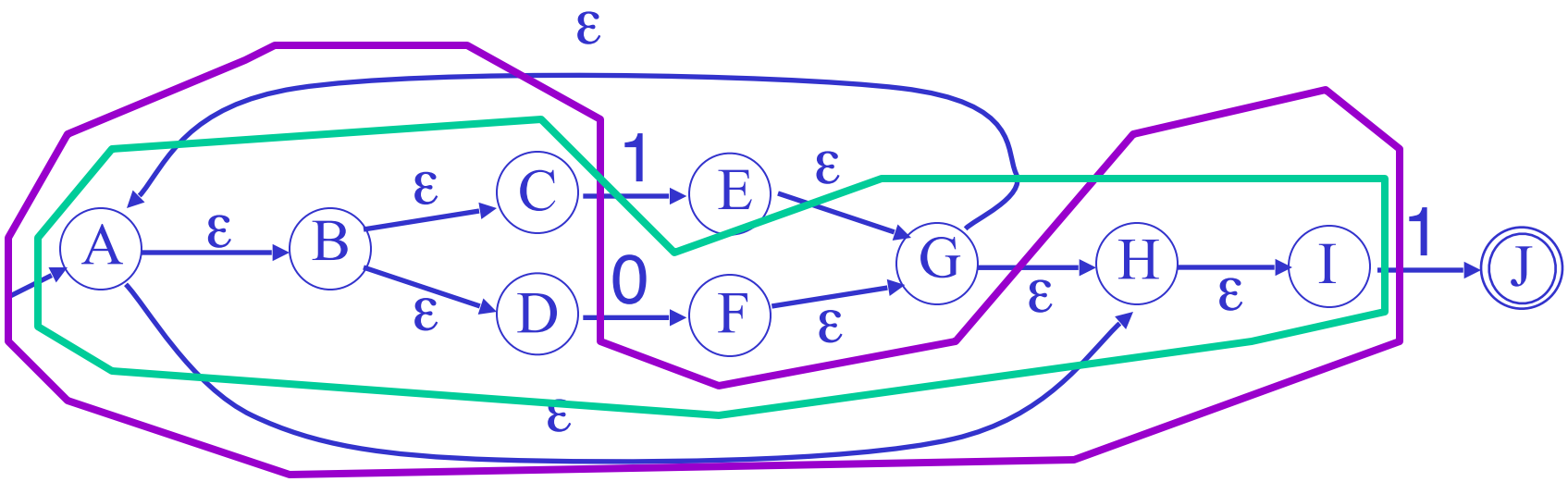

NFA -> DFA Example

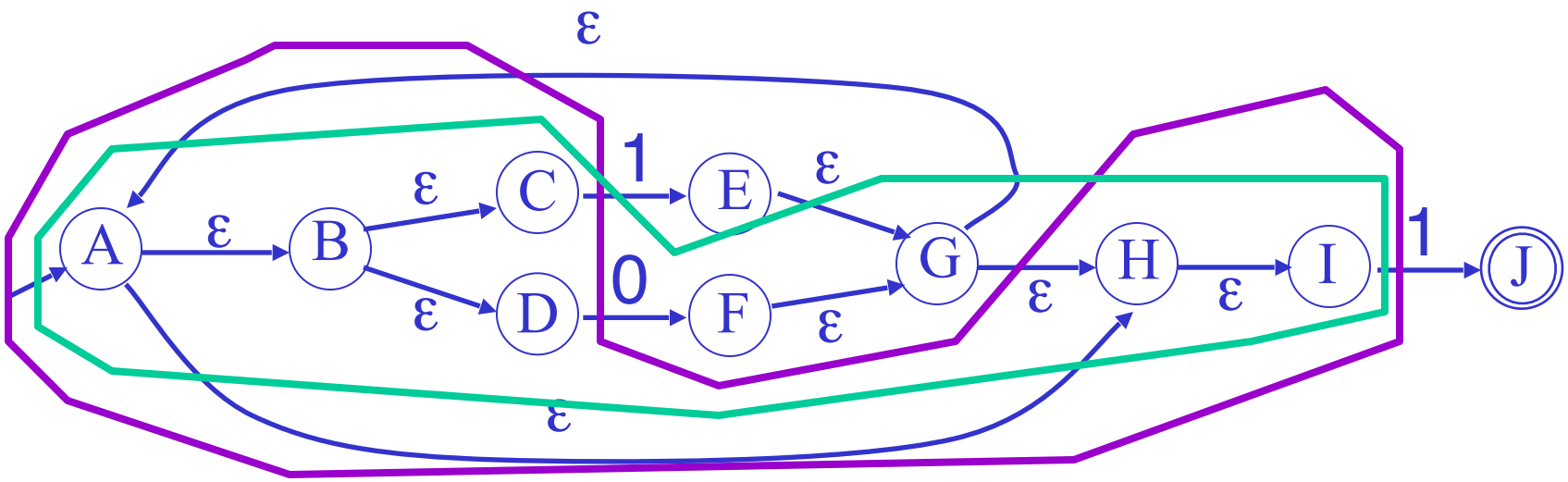

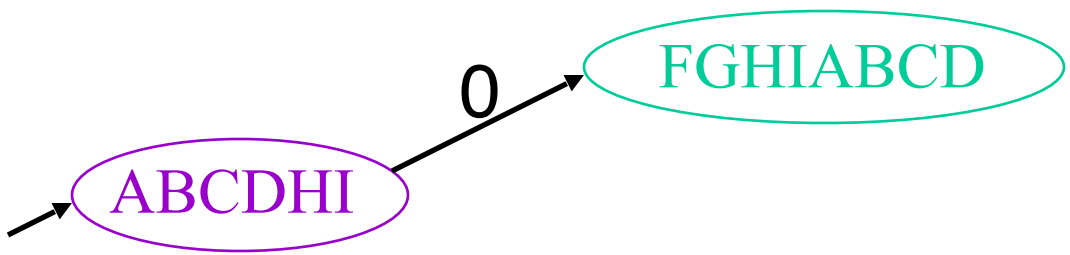

NFA -> DFA Example

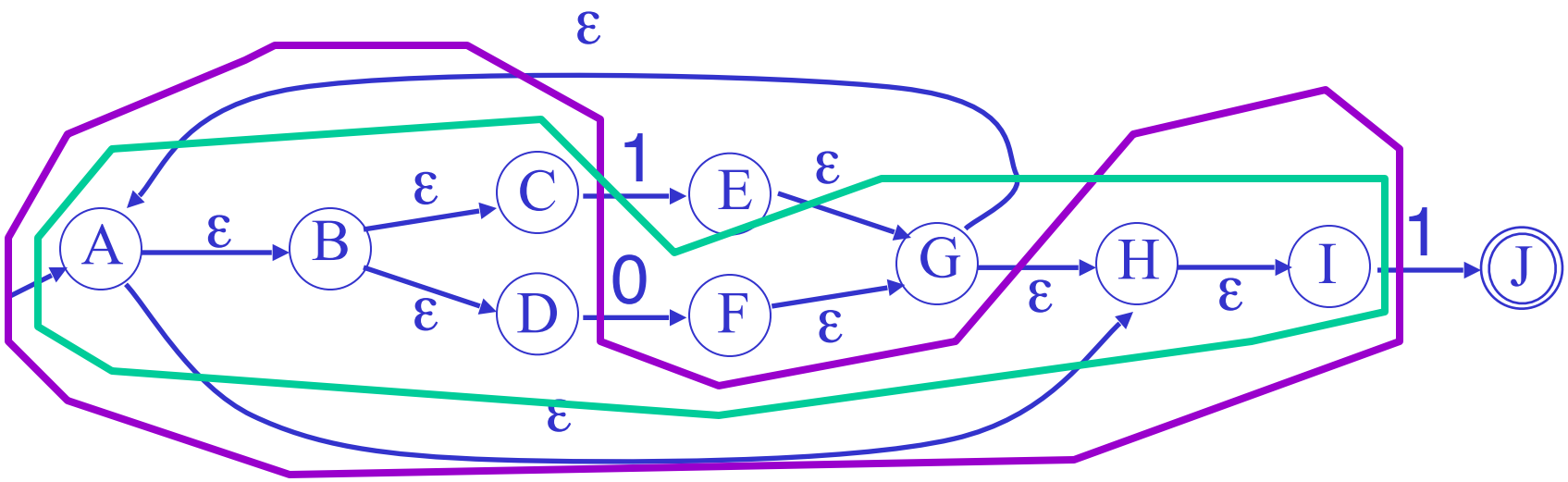

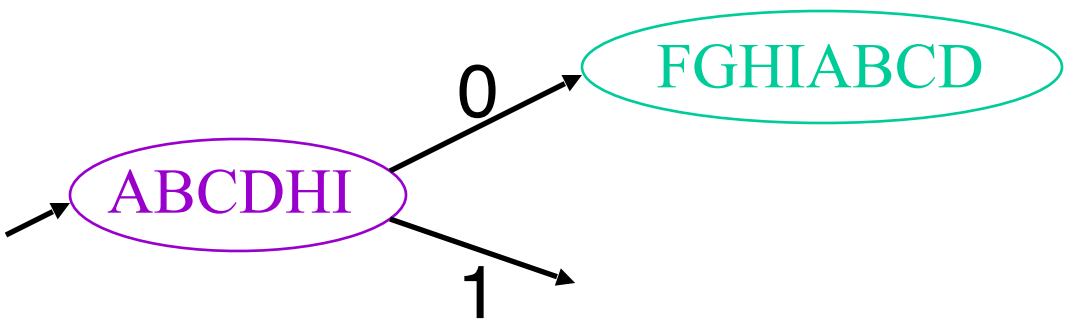

NFA -> DFA Example

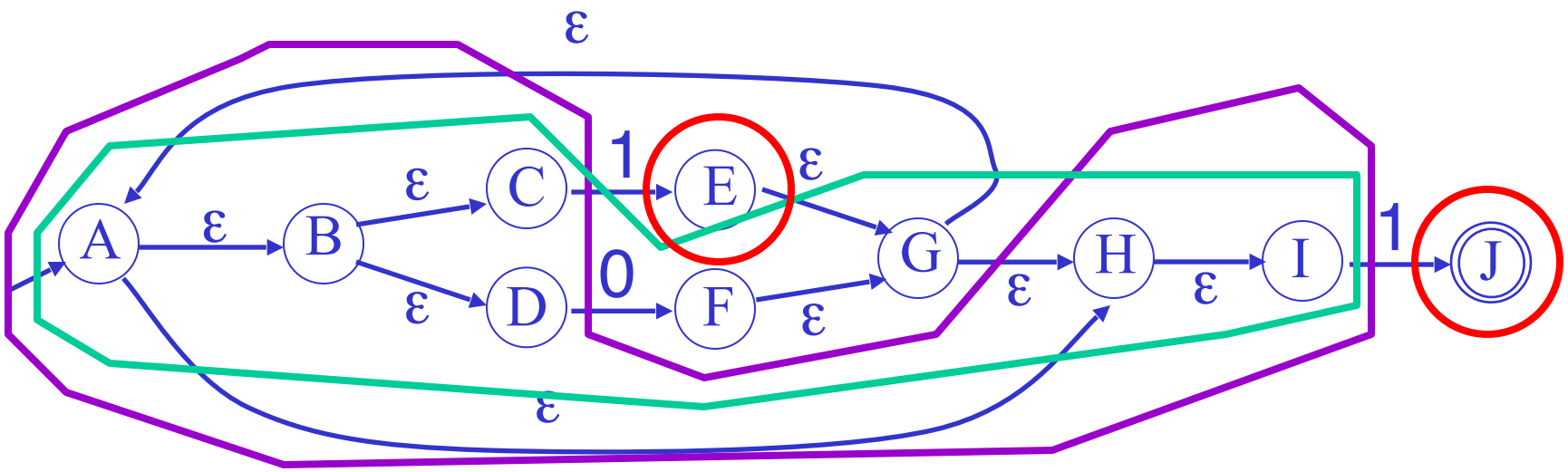

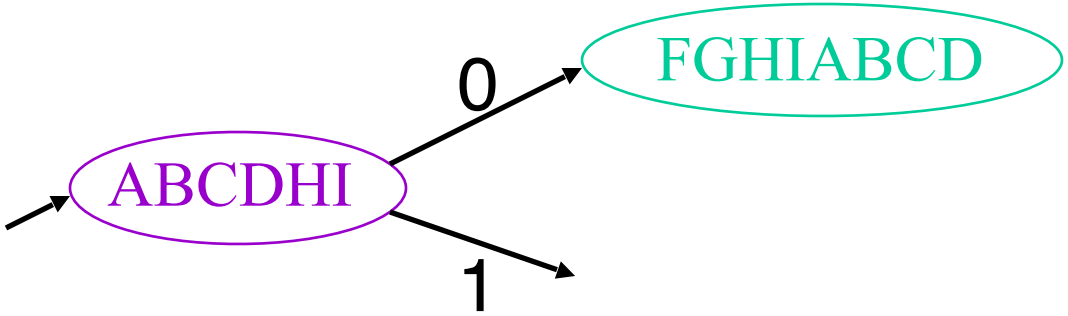

NFA -> DFA Example

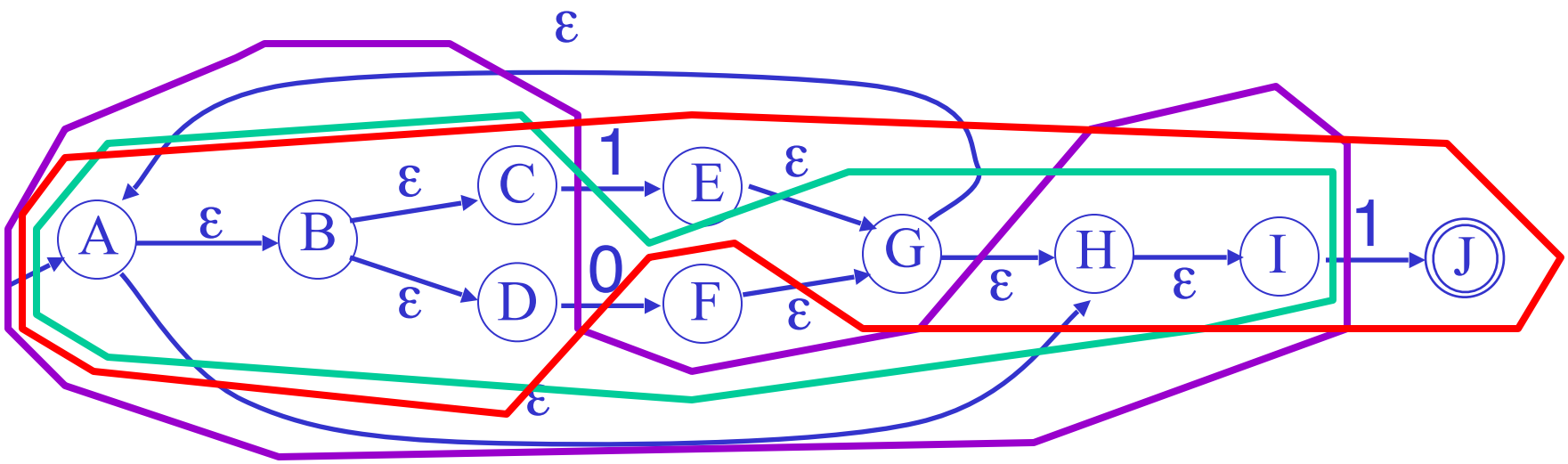

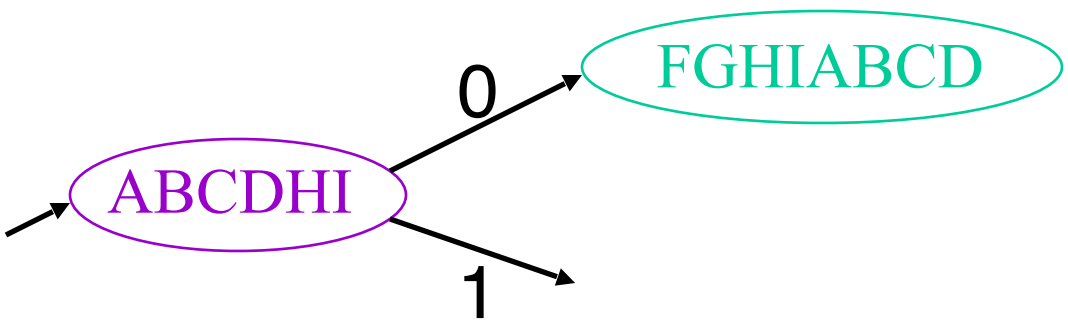

NFA -> DFA Example

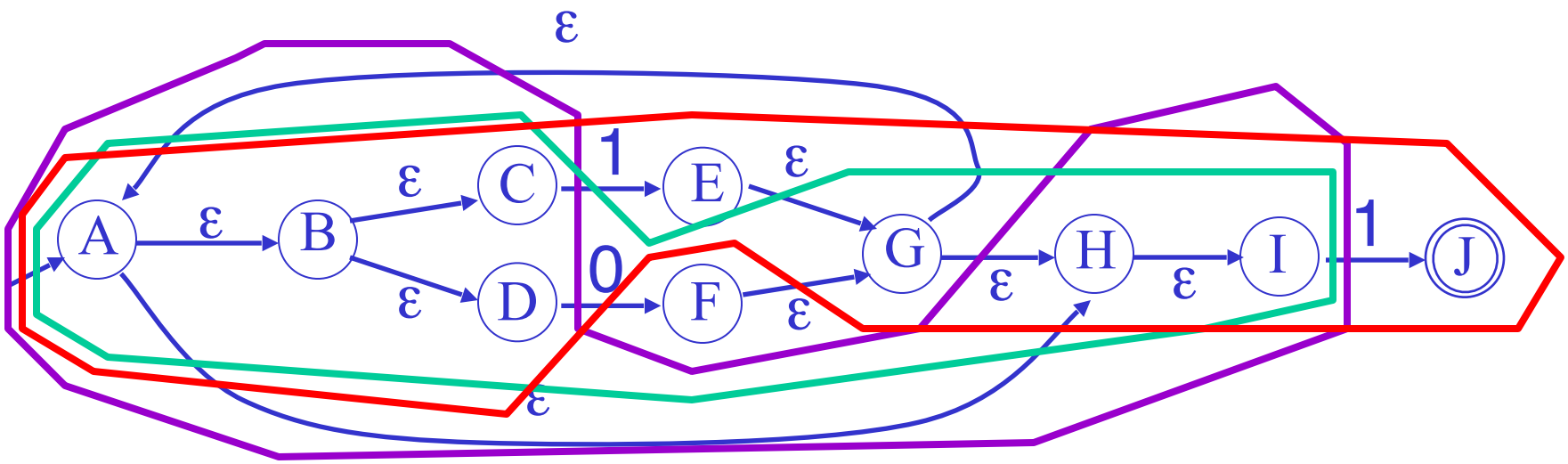

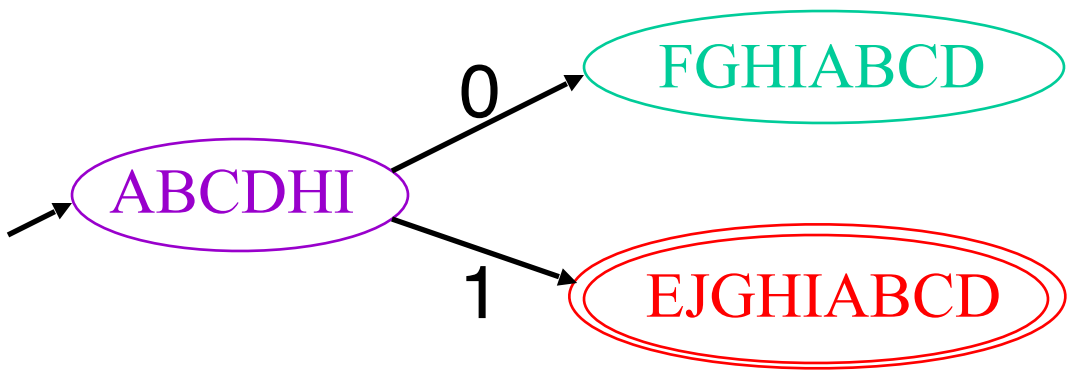

NFA -> DFA Example

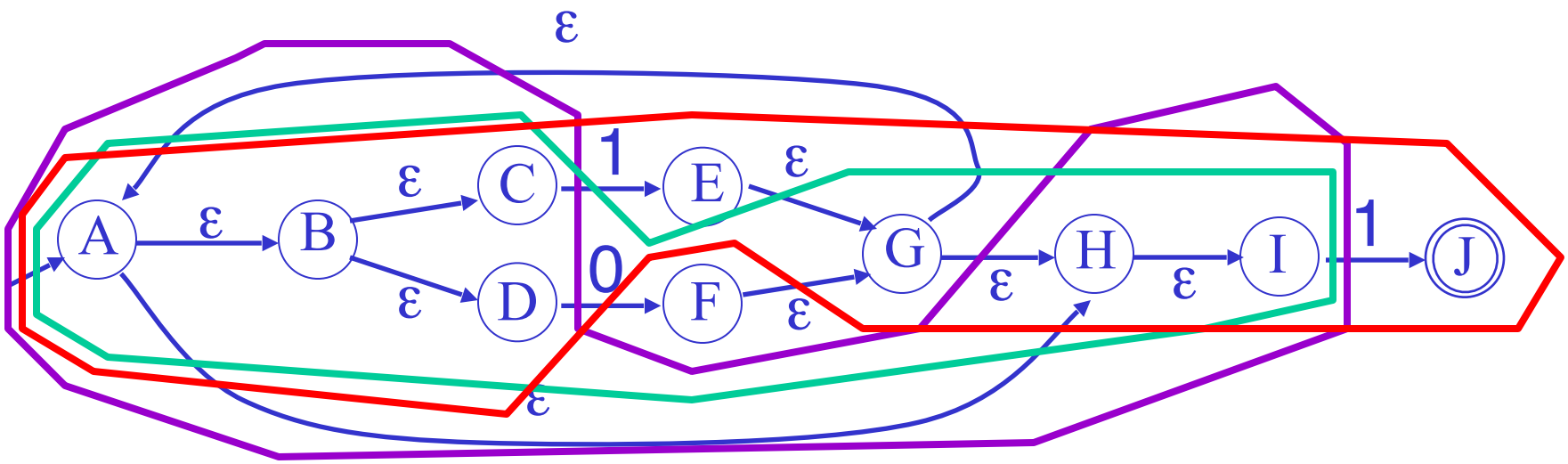

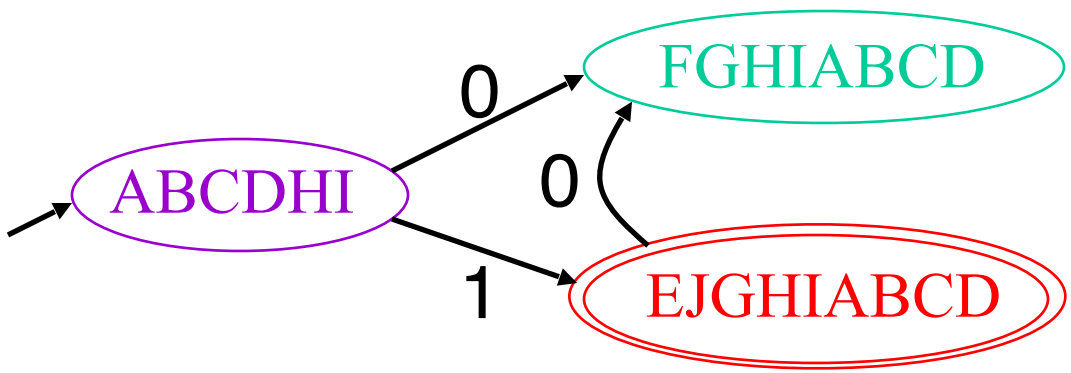

NFA -> DFA Example

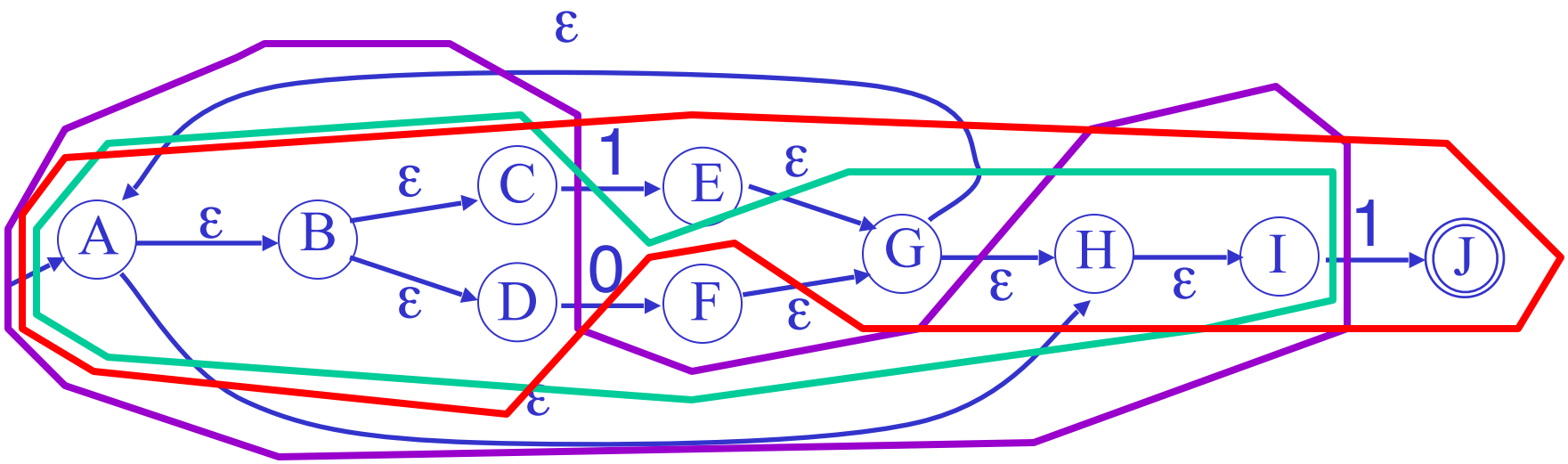

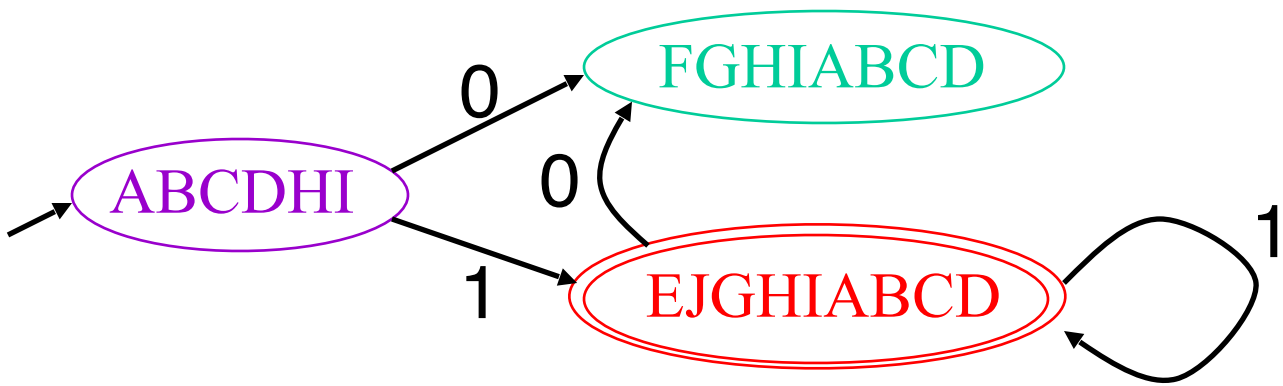

NFA -> DFA Example

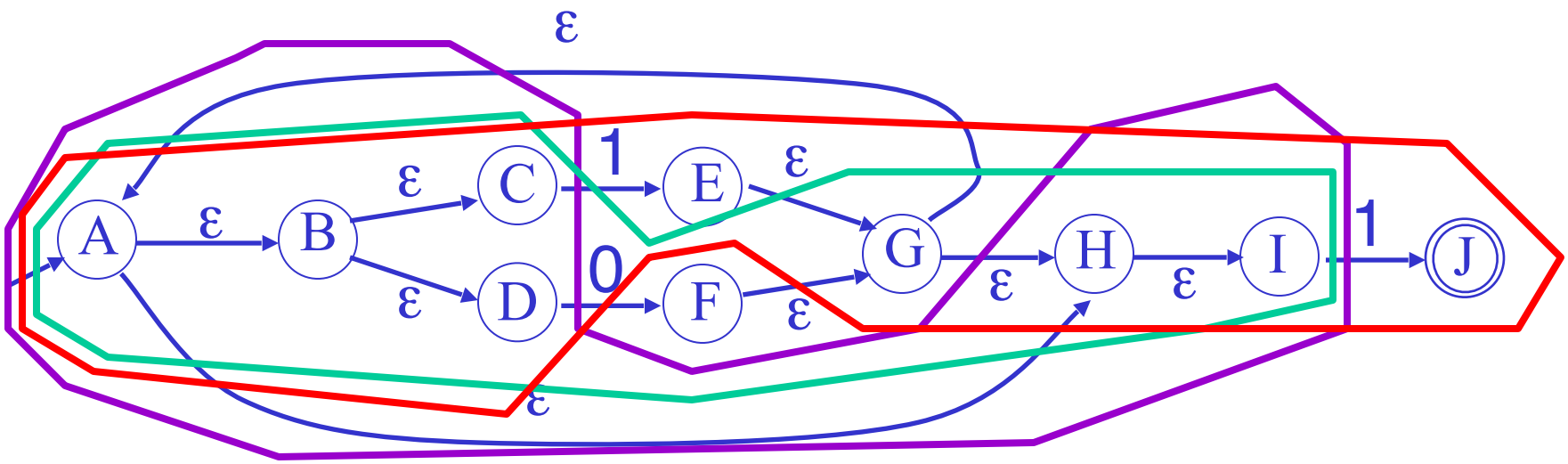

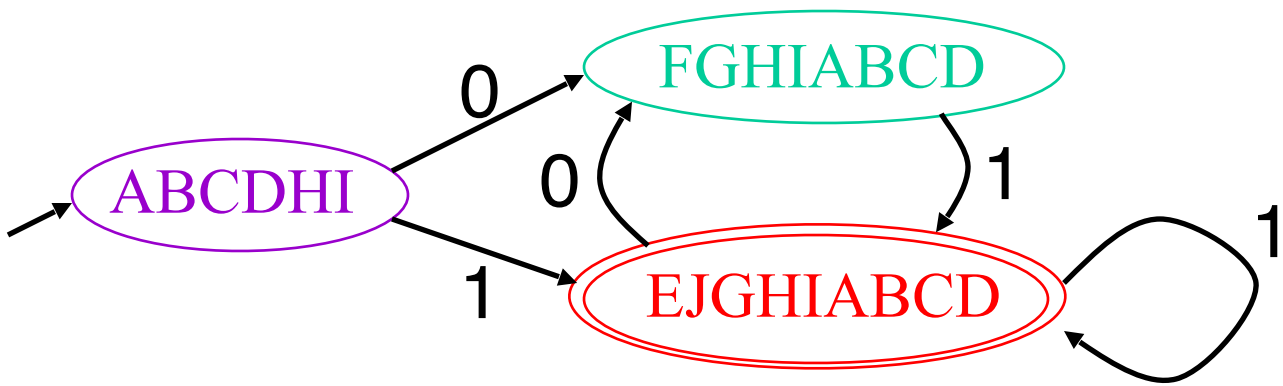

NFA -> DFA Example

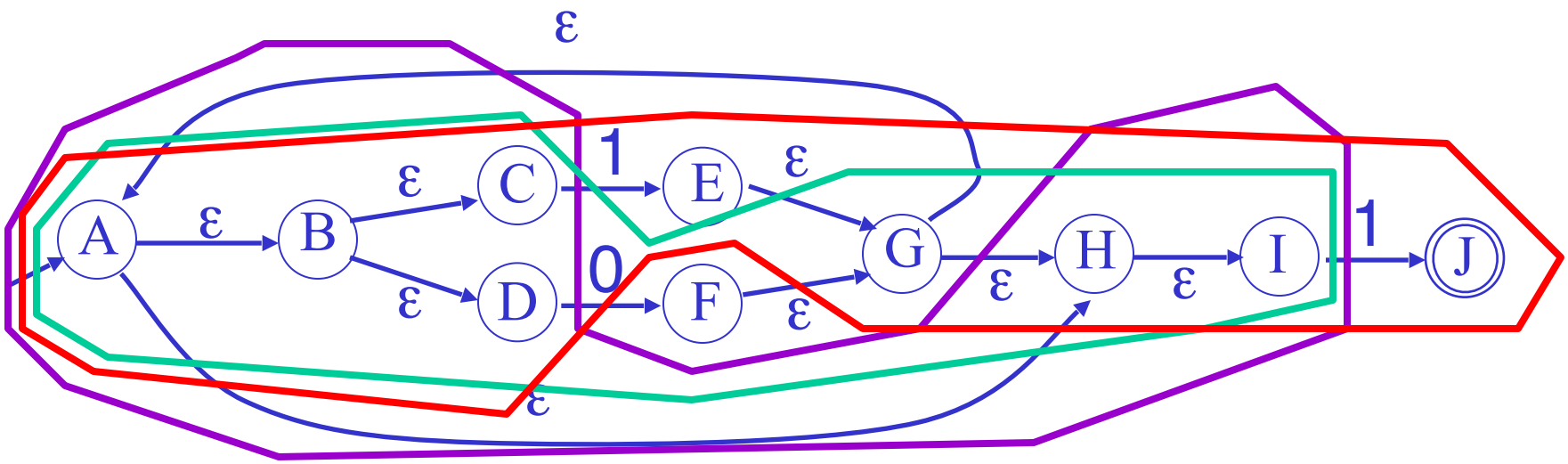

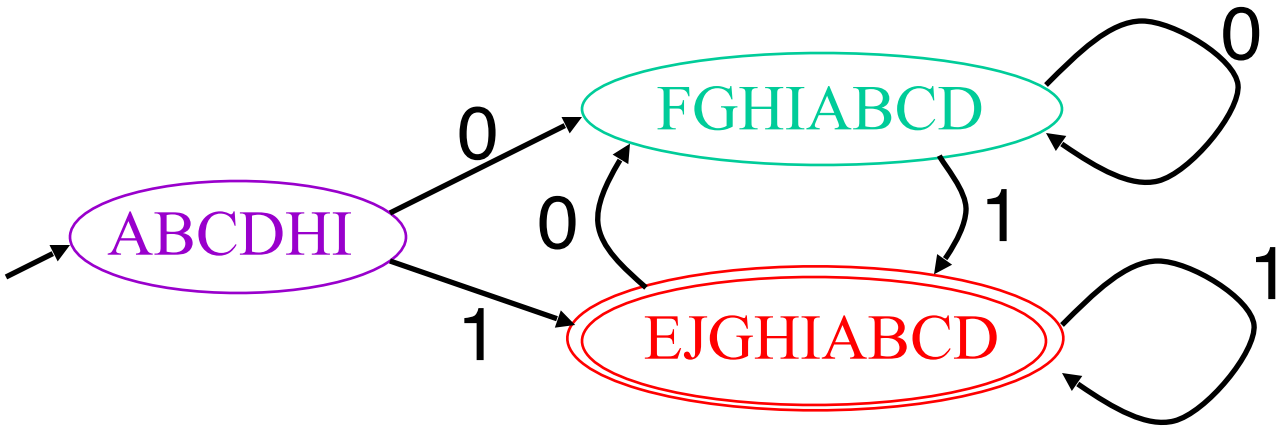

Implementation

- A DFA can be implemented by a 2D table T
  - One dimension is "states"
  - Other dimension is "input symbol"
  - For every transition $S_i \rightarrow^a S_k$ define $T[S_i,a] = S_k$

- DFA "execution"
  - If in state S_i and input a, read $T[i,a] = k$ and skip to state S_k
  - Very efficient

input symbols

states (S_i)	0	1
S_0	S_0	S_0
S_1	S_0	S_2
S_2	S_3	S_1
S_3	S_0	S_0

states (S_k)

Table Implementation of a DFA

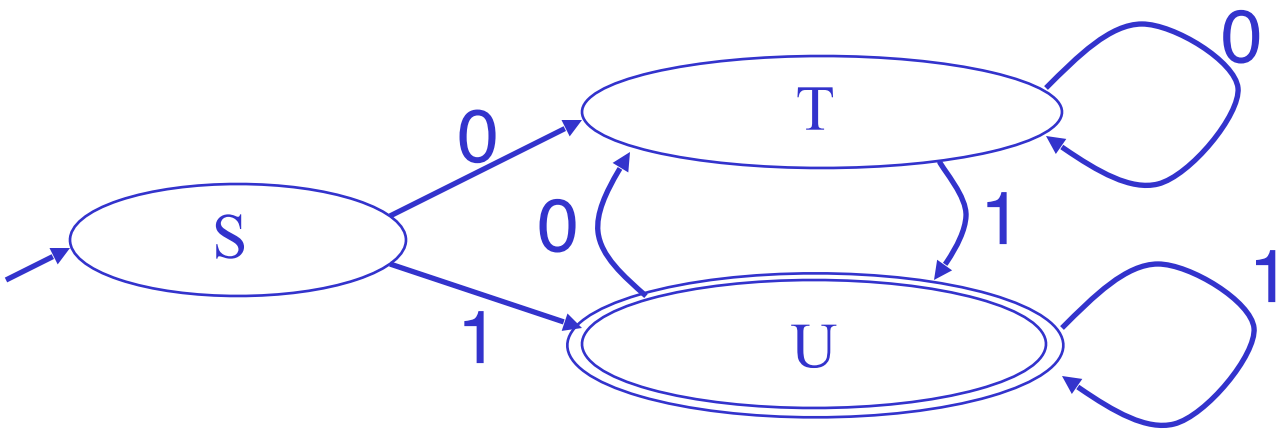

	0	1
S	T	U
T	T	U
U	T	U

Implementation (Cont.)

- NFA -> DFA conversion is at the heart of tools such as flex
- But, DFAs can be huge
- In practice, flex-like tools trade off speed for space in the choice of NFA and DFA representations