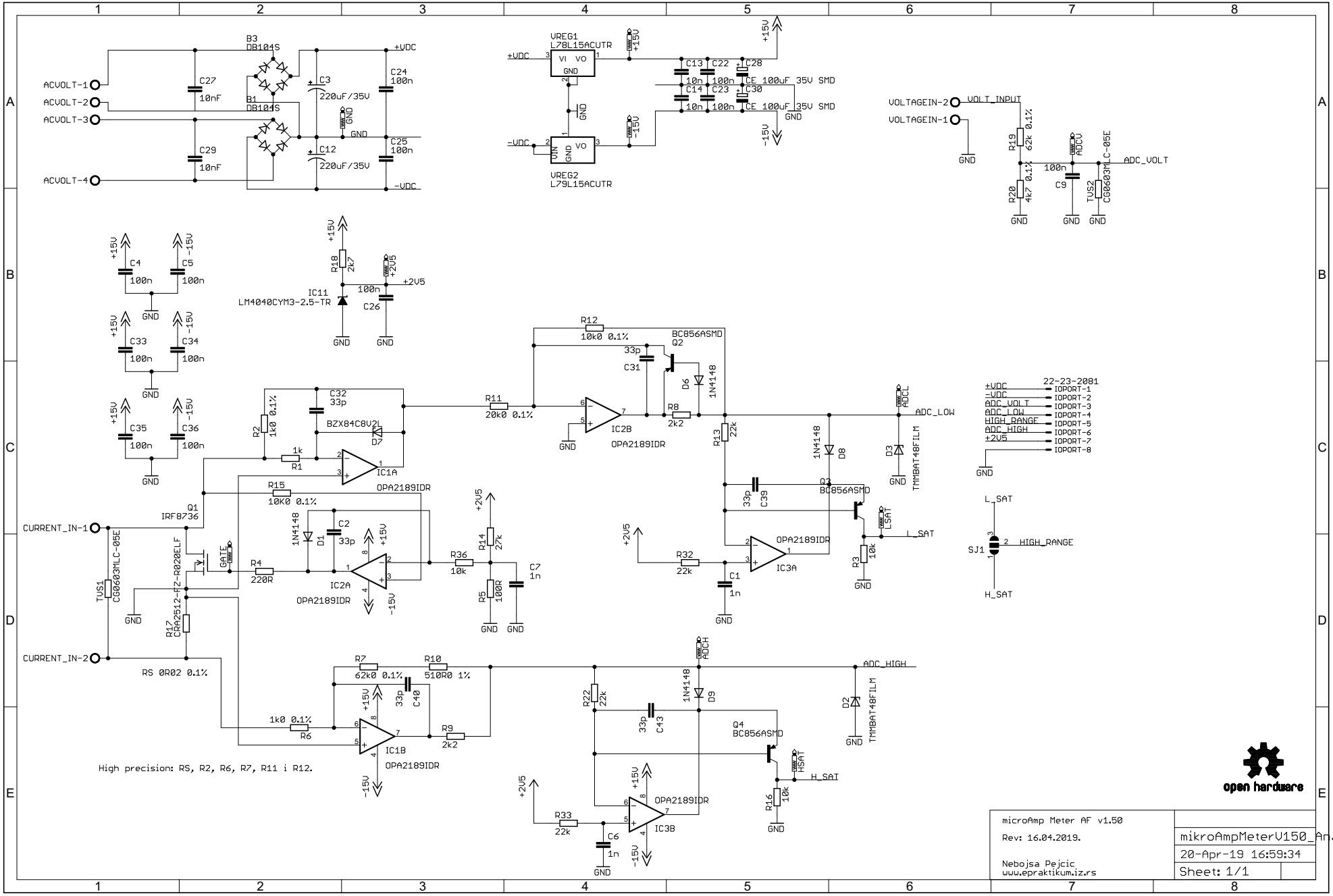
ACVOLT-1
ACVOLT-2
ACVOLT-3
ACVOLT-4
B3 DB104S
B1 DB104S
C27 10nF
C29 10nF
C3 220uF/35V
C12 220uF/35V
C24 100n
C25 100n
+VDC
-VDC
VREG1 L78L15ACUTR
VREG2 L79L15ACUTR
C13 10n
C14 10n
C22 100n
C23 100n
C28 CE 100uF 35V SMD
C30 CE 100uF 35V SMD
VOLTAGEIN-2
VOLTAGEIN-1
VOLT_INPUT
R19 62k 0.1%
R20 4k7 0.1%
C9 100n
TVS2 CG0603MLC-05E
ADC_VOLT
C4 100n
C5 100n
C33 100n
C34 100n
C35 100n
C36 100n
IC11 LM4040CYM3-2.5-TR
R18 2k7
C26 100n
+2V5
R12 10k0 0.1%
BC856ASMD Q2
C31 33p
D6 1N4148
R8 2k2
IC2B OPA2189IDR
R11 20k0 0.1%
C32 33p
BZX84C8V2L D7
R2 1k0 0.1%
R1 1k
IC1A OPA2189IDR
R13 22k
ADCL
ADC_LOW
D8 1N4148
D3 TMMBAT48FILM
C39 33p
Q3 BC856ASMD
LSAT
L_SAT
R3 10k
IC3A OPA2189IDR
R32 22k
C1 1n
22-23-2081
IOPORT-1
IOPORT-2
IOPORT-3
IOPORT-4
IOPORT-5
IOPORT-6
IOPORT-7
IOPORT-8
HIGH_RANGE
SJ1
H_SAT
R15 10K0 0.1%
Q1 IRF8736
CURRENT_IN-1
CURRENT_IN-2
TVS1 CG0603MLC-05E
GATE
R4 220R
D1 1N4148
C2 33p
IC2A OPA2189IDR
R36 10k
R14 27k
R5 100R
C7 1n
R17 CRA2512-F2-R020ELF
RS 0R02 0.1%
R7 62k0 0.1%
R10 510R0 1%
C40 33p
R6 1k0 0.1%
R9 2k2
IC1B OPA2189IDR
High precision: RS, R2, R6, R7, R11 i R12.
ADCH
ADC_HIGH
D9 1N4148
R22 22k
C43 33p
Q4 BC856ASMD
HSAT
R16 10k
D2 TMMBAT48FILM
R33 22k
C6 1n
IC3B OPA2189IDR
open hardware
microAmp Meter AF v1.50
Rev: 16.04.2019.
Nebojsa Pejcic
www.epraktikum.iz.rs
mikroAmpMeterV150_AnalogFrontend
20-Apr-19 16:59:34
Sheet: 1/1