Hawkeye Pedershaab
Concrete Technologies Worldwide ™

M CON
PIPE & PRODUCTS INC

2691 Greenfield Road
Ayr, ON N0B 1E0 Canada

Smartcast Basesection Designer. Order/Offer

Customer	BIRNAM EXCAVATING LTD
Delivery address	
Project No.	FOREST DEVELOPMENT 6332 TOWNSEND LINE
EPS Ø x H	1220 / 483

Order no.	251112_SAMH03_A
Date.	18-09-2025
Order Date	18-09-2025
Made by	mcon@mcon.com

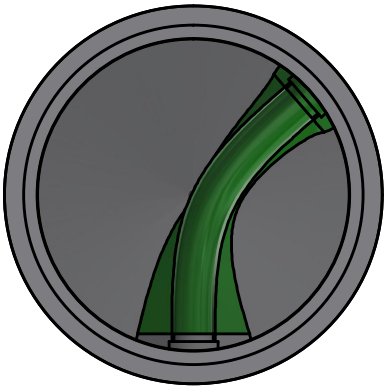

Mould	1220x127x762 2,5'
Basesection	1220x127x762 2,5'
Height mm	870
Bottom inserts mm	152
Benching Height mm	147
Benching Slope 0/00	125
Weight kg	2198 kg

	Main Inlet >	1				
Outlet/Inlet	Outlet	Inlet 1	Inlet 2	Inlet 3	Inlet 4	Inlet 5
Connections type	150-6" PVC SDR 28	150-6" PVC SDR 28				
Gasket type	10-06 PSX	10-06 PSX				
Dimension mm.	150	150				
Angle 360°	0	229				
Invert Level mm.	0	60				
2. Invert Level mm.		60				
Socket angle 0/00						
Channel Drop mm		60				
Straight section mm		50				
Note						

Approved by.	
Control	
Date	

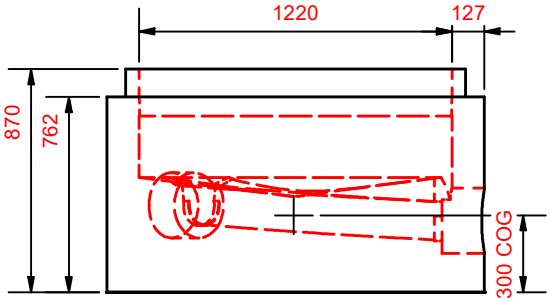

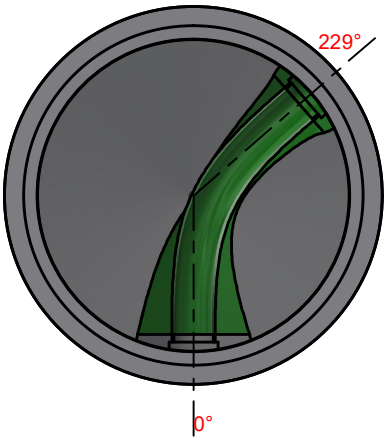

Hawkeye Pedershaab
Concrete Technologies Worldwide ™

M CON
PIPE & PRODUCTS INC

2691 Greenfield Road
Ayr, ON N0B 1E0 Canada

Smartcast Basesection Designer.

Customer	**BIRNAM EXCAVATING LTD**
Delivery address	
Project No.	**FOREST DEVELOPMENT 6332 TOWNSEND LINE**
Basesection	**1220x127x762 2,5'**
Order no.	**251112_SAMH03_A**
Order Date	**18-09-2025**
Weight kg	**2198 kg**

Center of gravity	300
EPS raw height	483
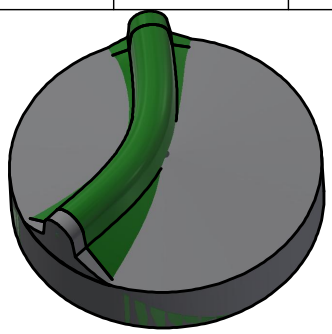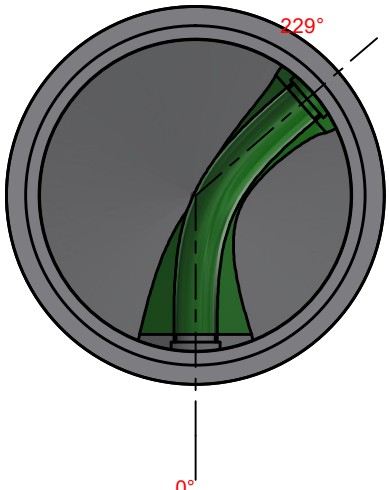
	Main Inlet >	1				
Outlet/Inlet	Outlet	Inlet 1	Inlet 2	Inlet 3	Inlet 4	Inlet 5
Angle 360°	0	229				
Invert Level mm.	0	60				
Connections type	150-6" PVC SDR 28	150-6" PVC SDR 28