Hawkeye Pedershaab
Concrete Technologies Worldwide ™

M CON
PIPE & PRODUCTS INC

2691 Greenfield Road
Ayr, ON N0B 1E0 Canada

Smartcast Basesection Designer. Order/Offer

Customer	BRIDUCO ENTERPRISES INC
Delivery address	
Project No.	133 & 137 MAIN STREET EAST GRIMSBY
EPS Ø x H	1220 / 634,5

Order no.	251191_MH01A_A
Date.	03-11-2025
Order Date	03-11-2025
Made by	mcon@mcon.com

Mould	1220x127x914 3'
Basesection	1220x127x914 3'
Height mm	1022
Bottom inserts mm	152
Benching Height mm	126
Benching Slope 0/00	125
Weight kg	2267 kg

	Main Inlet >	1				
Outlet/Inlet	Outlet	Inlet 1	Inlet 2	Inlet 3	Inlet 4	Inlet 5
Connections type	250-10" PVC SDR 35	250-10" PVC SDR 35				
Gasket type	14M PSX	14M PSX				
Dimension mm.	251	251				
Angle 360°	0	252				
Invert Level mm.	0	60				
2. Invert Level mm.		60				
Socket angle 0/00						
Channel Drop mm		60				
Straight section mm		50				
Note						

Approved by.	
Control	
Date	

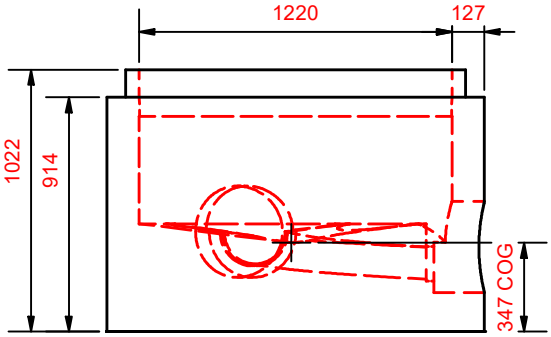

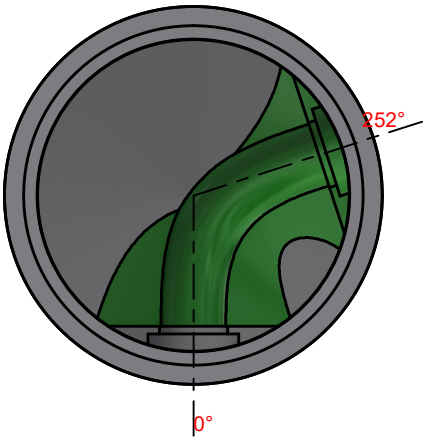

Hawkeye Pedershaab
Concrete Technologies Worldwide ™

M CON
PIPE & PRODUCTS INC

2691 Greenfield Road
Ayr, ON N0B 1E0 Canada

Smartcast Basesection Designer.

Customer	BRIDUCO ENTERPRISES INC
Delivery address	
Project No.	133 & 137 MAIN STREET EAST-GRIMSBY
Basesection	1220x127x914 3'
Order no.	251191_MH01A_A
Order Date	03-11-2025
Weight kg	2267 kg

Center of gravity	347
EPS raw height	634,5
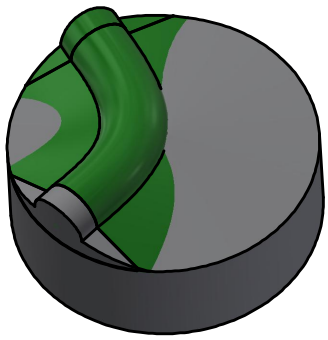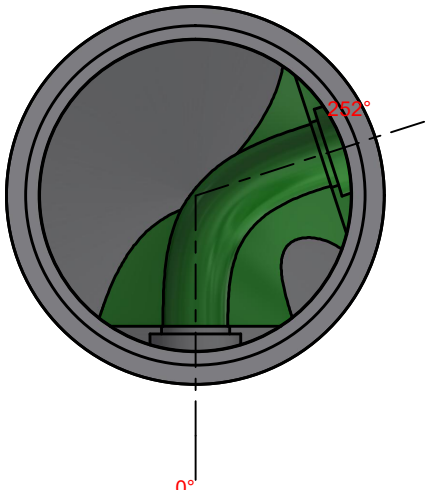
	Main Inlet >	1				
Outlet/Inlet	Outlet	Inlet 1	Inlet 2	Inlet 3	Inlet 4	Inlet 5
Angle 360°	0	252				
Invert Level mm.	0	60				
Connections type	250-10" PVC SDR 35	250-10" PVC SDR 35