Hawkeye Pedershaab
Concrete Technologies Worldwide ™

M CON
PIPE & PRODUCTS INC

2691 Greenfield Road
Ayr, ON N0B 1E0 Canada

Smartcast Basesection Designer. Order/Offer

Customer	PRO-DRAIN (1984)
Delivery address	
Project No.	SIR ROBERT PEEL CENTRE PH 1
EPS Ø x H	1220 / 787,5

Order no.	251245_SANMH2A_A
Date.	10-09-2025
Order Date	10-09-2025
Made by	mcon@mcon.com

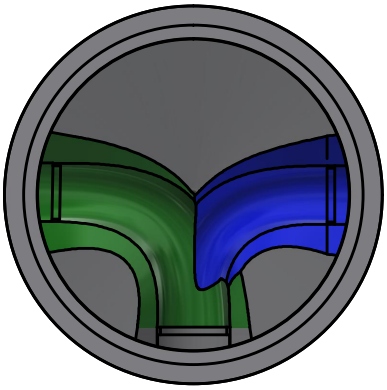

Mould	1220x127x1067 3,5'
Basesection	1220x127x1067 3,5'
Height mm	1175
Bottom inserts mm	152
Benching Height mm	251
Benching Slope 0/00	125
Weight kg	2625 kg

	Main Inlet >	1				
Outlet/Inlet	Outlet	Inlet 1	Inlet 2	Inlet 3	Inlet 4	Inlet 5
Connections type	250-10" PVC SDR 35	200-8" PVC SDR 35	200-8" PVC SDR 35			
Gasket type	14M PSX	12-08 PSX	12-08 PSX			
Dimension mm.	251	201	201			
Angle 360°	0	91	270			
Invert Level mm.	0	33	30			
2. Invert Level mm.		33	30			
Socket angle 0/00						
Channel Drop mm		33	30			
Straight section mm		50	50			
Note						

Approved by.	
Control	
Date	

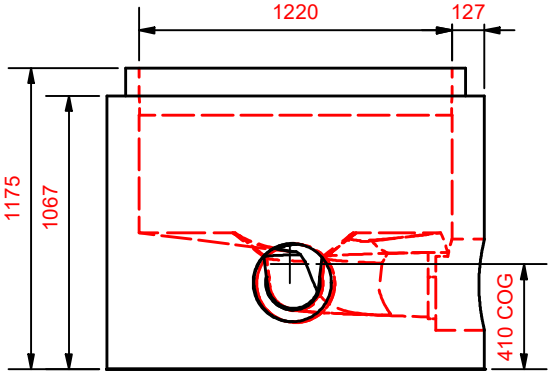

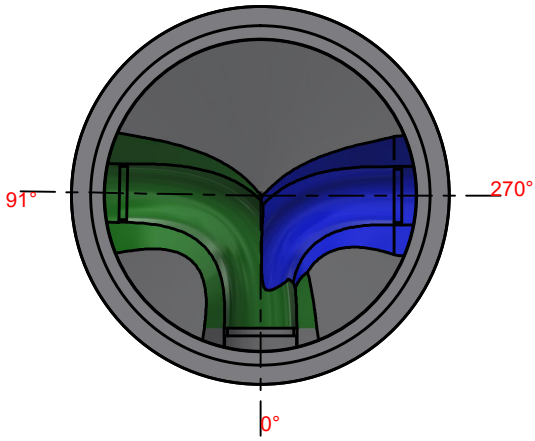

Hawkeye Pedershaab
Concrete Technologies Worldwide ™

M CON
PIPE & PRODUCTS INC

2691 Greenfield Road
Ayr, ON N0B 1E0 Canada

Smartcast Basesection Designer.

Customer	**PRO-DRAIN (1984)**
Delivery address	
Project No.	**SIR ROBERT PEEL CENTRE PH 1**
Basesection	**1220x127x1067 3,5'**
Order no.	**251245_SANMH2A_A**
Order Date	**10-09-2025**
Weight kg	**2625 kg**

Center of gravity	410
EPS raw height	787,5
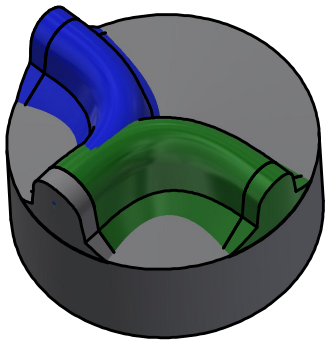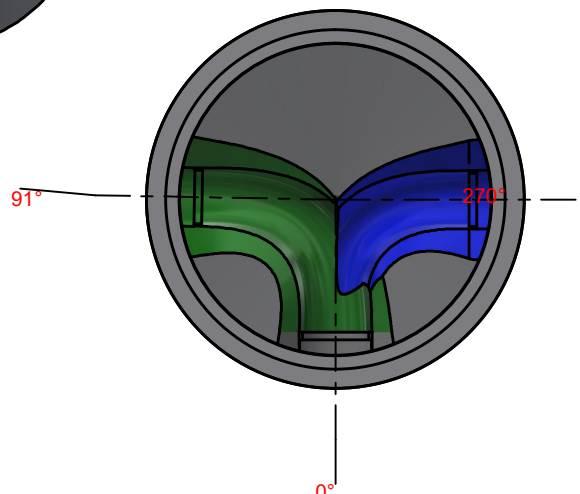
	Main Inlet >	1				
Outlet/Inlet	Outlet	Inlet 1	Inlet 2	Inlet 3	Inlet 4	Inlet 5
Angle 360°	0	91	270			
Invert Level mm.	0	33	30			
Connections type	250-10" PVC SDR 35	200-8" PVC SDR 35	200-8" PVC SDR 35