Hawkeye Pedershaab
Concrete Technologies Worldwide ™

M CON
PIPE & PRODUCTS INC

2691 Greenfield Road
Ayr, ON N0B 1E0 Canada

Smartcast Basesection Designer. Order/Offer

Customer	PRO-DRAIN (1984)
Delivery address	
Project No.	SIR ROBERT PEEL CENTRE PH 1
EPS Ø x H	1220 788

Order no.	251245_SANMH3A_A
Date.	10-09-2025
Order Date	10-09-2025
Made by	mcon@mcon.com

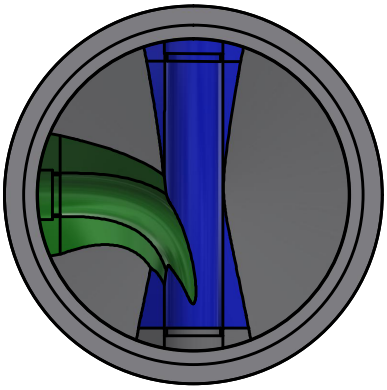

Mould	1220x127x1067 3,5'
Basesection	1220x127x1067 3,5'
Height mm	1175
Bottom inserts mm	152
Benching Height mm	201
Benching Slope 0/00	125
Weight kg	2557 kg

	Main Inlet >		1			
Outlet/Inlet	Outlet	Inlet 1	Inlet 2	Inlet 3	Inlet 4	Inlet 5
Connections type	200-8" PVC SDR 35	150-6" PVC SDR 28	200-8" PVC SDR 35			
Gasket type	12-08 PSX	10-06 PSX	12-08 PSX			
Dimension mm.	201	150	201			
Angle 360°	0	90	180			
Invert Level mm.	0	10	30			
2. Invert Level mm.		10	30			
Socket angle 0/00						
Channel Drop mm		10	30			
Straight section mm		50	50			
Note						

Approved by.	
Control	
Date	

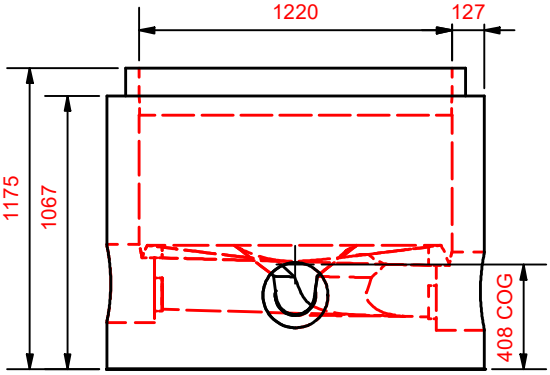

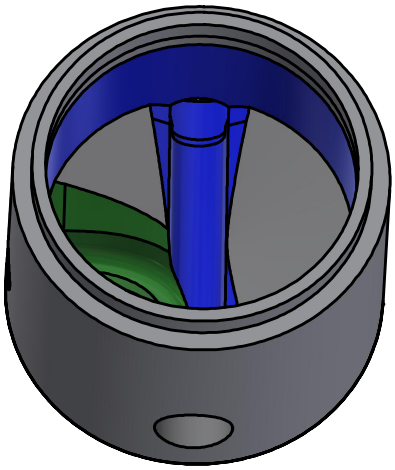

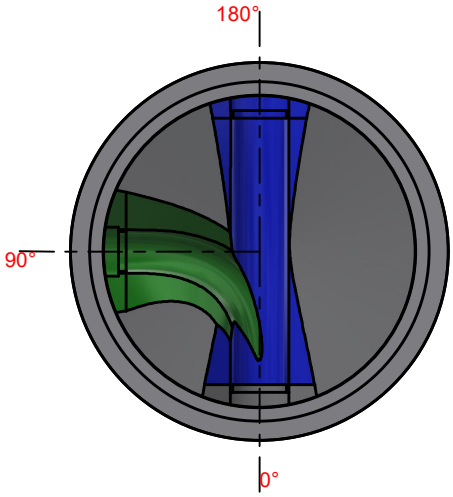

Hawkeye Pedershaab
Concrete Technologies Worldwide ™

M CON
PIPE & PRODUCTS INC

2691 Greenfield Road
Ayr, ON N0B 1E0 Canada

Smartcast Basesection Designer.

Customer	**PRO-DRAIN (1984)**
Delivery address	
Project No.	**SIR ROBERT PEEL CENTRE PH 1**
Basesection	**1220x127x1067 3,5'**
Order no.	**251245_SANMH3A_A**
Order Date	**10-09-2025**
Weight kg	**2557 kg**

Center of gravity	408
EPS raw height	788
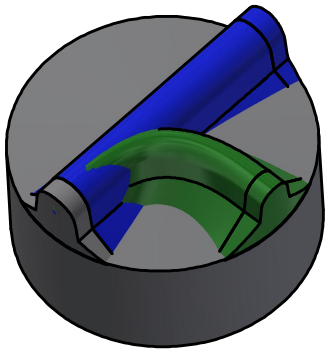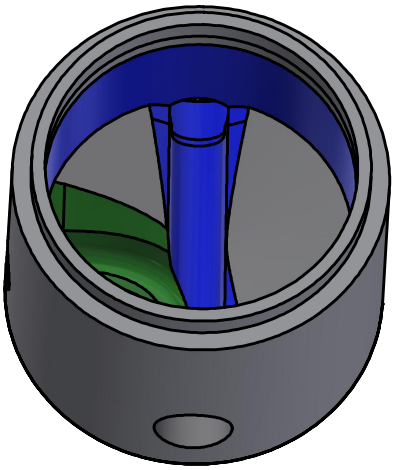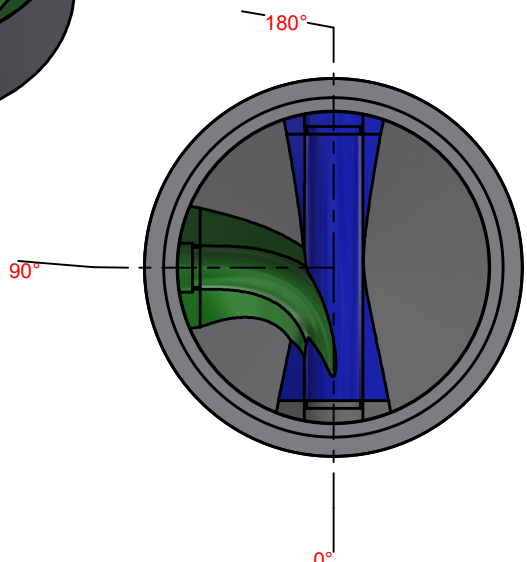
	Main Inlet >		1			
Outlet/Inlet	Outlet	Inlet 1	Inlet 2	Inlet 3	Inlet 4	Inlet 5
Angle 360°	0	90	180			
Invert Level mm.	0	10	30			
Connections type	200-8" PVC SDR 35	150-6" PVC SDR 28	200-8" PVC SDR 35