Hawkeye Pedershaab
Concrete Technologies Worldwide ™

M CON
PIPE & PRODUCTS INC

2691 Greenfield Road
Ayr, ON N0B 1E0 Canada

Smartcast Basesection Designer. Order/Offer

Customer	INTEGROY CONSTRUCTION INC
Delivery address	
Project No.	FRAMGARD N & S BLOCKS THE LAURELS BLDGS 1 & 2
EPS Ø x H	1220 / 864

Order no.	251292_SANCTRLMH1A_A
Date.	05-12-2025
Order Date	05-12-2025
Made by	mcon@mcon.com

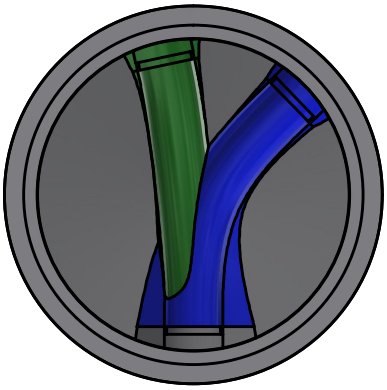

Mould	1220x127x1143 3,75'
Basesection	1220x127x1143 3,75'
Height mm	1251
Bottom inserts mm	152
Benching Height mm	201
Benching Slope 0/00	125
Weight kg	2743 kg

	Main Inlet >		1			
Outlet/Inlet	Outlet	Inlet 1	Inlet 2	Inlet 3	Inlet 4	Inlet 5
Connections type	200-8" PVC SDR 35	200-8" PVC SDR 35	200-8" PVC SDR 35			
Gasket type	12-08 PSX	12-08 PSX	12-08 PSX			
Dimension mm.	201	201	201			
Angle 360°	0	168	226			
Invert Level mm.	0	90	90			
2. Invert Level mm.		90	90			
Socket angle 0/00						
Channel Drop mm		90	90			
Straight section mm		50	50			
Note						

Approved by.	
Control	
Date	

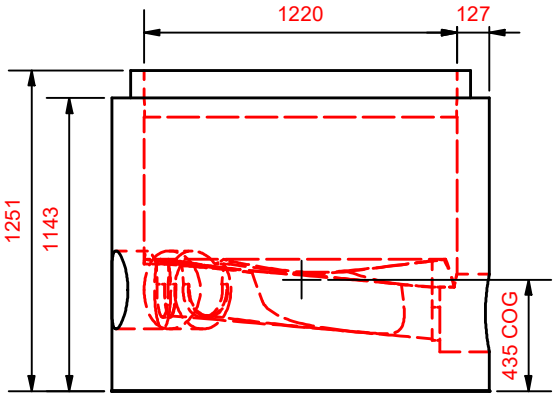

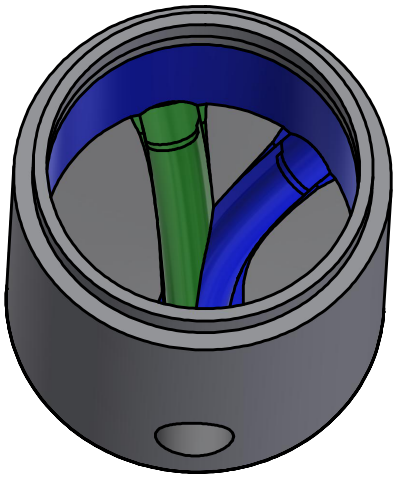

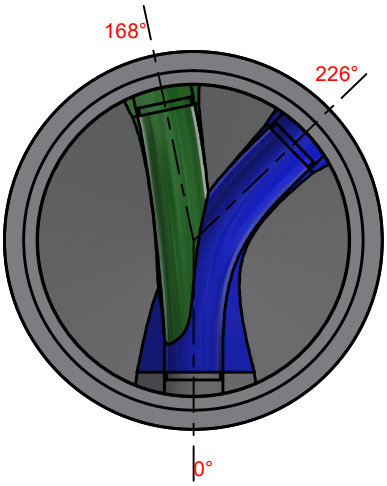

Hawkeye Pedershaab
Concrete Technologies Worldwide ™

M CON
PIPE & PRODUCTS INC

2691 Greenfield Road
Ayr, ON N0B 1E0 Canada

Smartcast Basesection Designer.

Customer	INTEGROY CONSTRUCTION INC
Delivery address	
Project No.	FRAMGARD N & S BLOCKS THE LAURELS BLDGS 1 & 2
Basesection	1220x127x1143 3,75'
Order no.	251292_SANCTRLMH1A_A
Order Date	05-12-2025
Weight kg	2743 kg

Center of gravity	435
EPS raw height	864
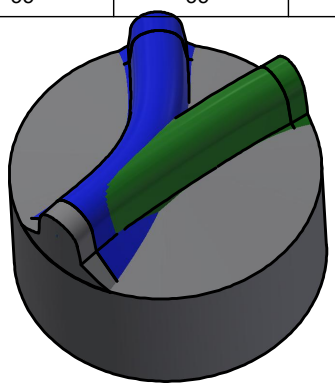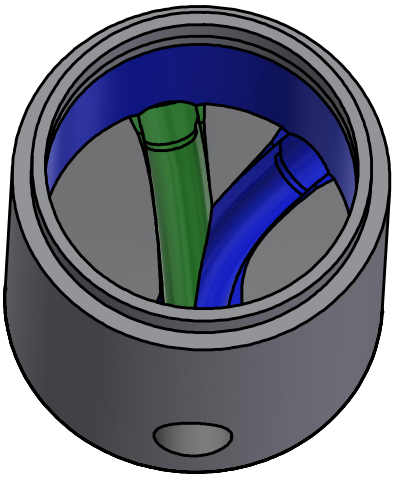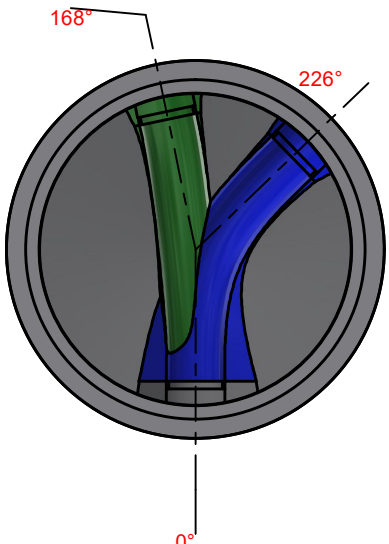
	Main Inlet >		1			
Outlet/Inlet	Outlet	Inlet 1	Inlet 2	Inlet 3	Inlet 4	Inlet 5
Angle 360°	0	168	226			
Invert Level mm.	0	90	90			
Connections type	200-8" PVC SDR 35	200-8" PVC SDR 35	200-8" PVC SDR 35