Hawkeye Pedershaab
Concrete Technologies Worldwide ™

M CON
PIPE & PRODUCTS INC

2691 Greenfield Road
Ayr, ON N0B 1E0 Canada

Smartcast Basesection Designer. Order/Offer

Customer	CASH-NAVER
Delivery address	
Project No.	371 LAKEVIEW DRIVE PHASE 2
EPS Ø x H	1220 / 483

Order no.	251315_MH01A_A
Date.	26-11-2025
Order Date	26-11-2025
Made by	mcon@mcon.com

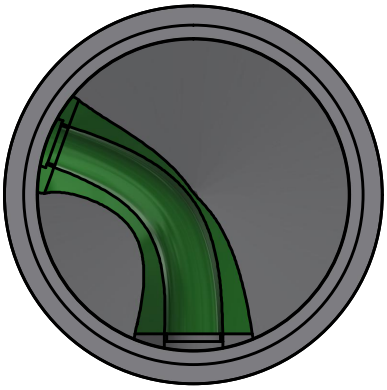

Mould	1220x127x762 2,5'
Basesection	1220x127x762 2,5'
Height mm	870
Bottom inserts mm	152
Benching Height mm	201
Benching Slope 0/00	125
Weight kg	2356 kg

	Main Inlet >	1				
Outlet/Inlet	Outlet	Inlet 1	Inlet 2	Inlet 3	Inlet 4	Inlet 5
Connections type	200-8" PVC SDR 35	150-6" PVC SDR 28				
Gasket type	12-08 PSX	10-06 PSX				
Dimension mm.	201	150				
Angle 360°	0	110				
Invert Level mm.	0	100				
2. Invert Level mm.		100				
Socket angle 0/00						
Channel Drop mm		100				
Straight section mm		50				
Note						

Approved by.	
Control	
Date	

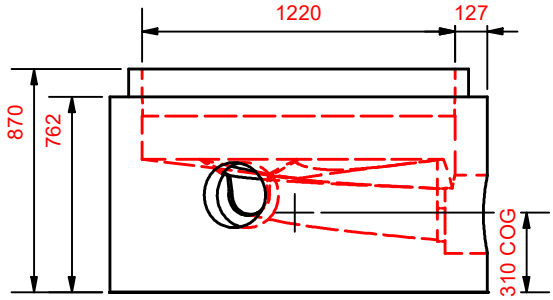

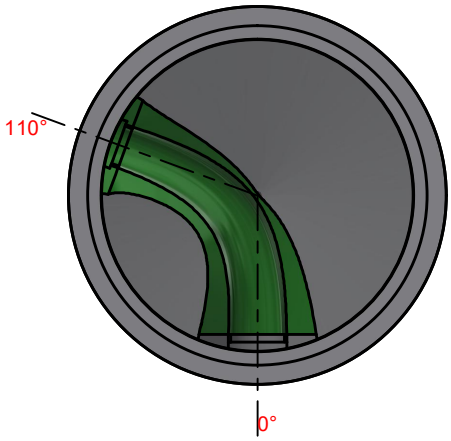

Hawkeye Pedershaab
Concrete Technologies Worldwide ™

M CON
PIPE & PRODUCTS INC

2691 Greenfield Road
Ayr, ON N0B 1E0 Canada

Smartcast Basesection Designer.

Customer	**CASH-NAVER**
Delivery address	
Project No.	**371 LAKEVIEW DRIVE PHASE 2**
Basesection	**1220x127x762 2,5'**
Order no.	**251315_MH01A_A**
Order Date	**26-11-2025**
Weight kg	**2356 kg**

Center of gravity	310
EPS raw height	483
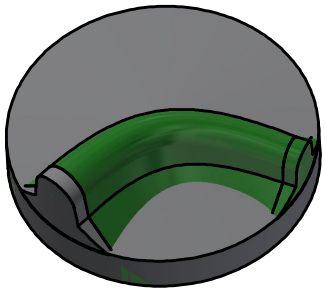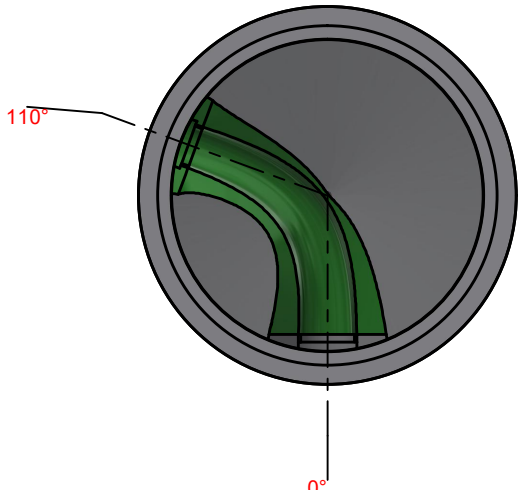
	Main Inlet >	1				
Outlet/Inlet	Outlet	Inlet 1	Inlet 2	Inlet 3	Inlet 4	Inlet 5
Angle 360°	0	110				
Invert Level mm.	0	100				
Connections type	200-8" PVC SDR 35	150-6" PVC SDR 28