Hawkeye Pedershaab
Concrete Technologies Worldwide ™

M CON
PIPE & PRODUCTS INC

2691 Greenfield Road
Ayr, ON N0B 1E0 Canada

Smartcast Basesection Designer. Order/Offer

Customer	G. MELO EXCAVATING LTD
Delivery address	
Project No.	ARLINGTON MEADOWS SUBDIVISION BLOCK 135
EPS Ø x H	1220 / 481,5

Order no.	251349_CBMH114_A
Date.	01-10-2025
Order Date	01-10-2025
Made by	mcon@mcon.com

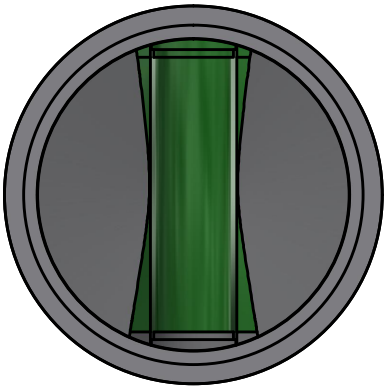

Mould	1220x127x762 2,5'
Basesection	1220x127x762 2,5'
Height mm	870
Bottom inserts mm	152
Benching Height mm	299
Benching Slope 0/00	125
Weight kg	2329 kg

	Main Inlet >	1				
Outlet/Inlet	Outlet	Inlet 1	Inlet 2	Inlet 3	Inlet 4	Inlet 5
Connections type	300-12" PVC SDR 35	300-12" PVC SDR 35				
Gasket type	16M PSX	16M PSX				
Dimension mm.	299	299				
Angle 360°	0	180				
Invert Level mm.	0	30				
2. Invert Level mm.		30				
Socket angle 0/00						
Channel Drop mm		30				
Straight section mm		50				
Note						

Approved by.	
Control	
Date	

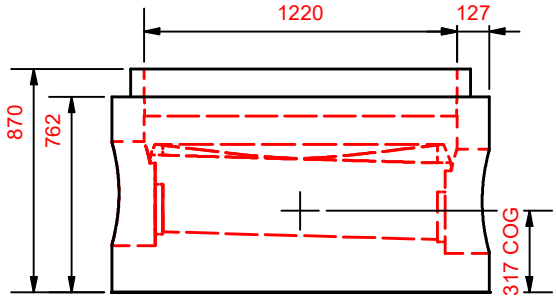

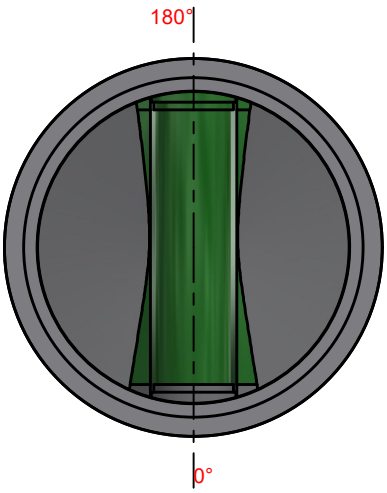

Hawkeye Pedershaab
Concrete Technologies Worldwide ™

M CON
PIPE & PRODUCTS INC

2691 Greenfield Road
Ayr, ON N0B 1E0 Canada

Smartcast Basesection Designer.

Customer	**G. MELO EXCAVATING LTD**
Delivery address	
Project No.	**ARLINGTON MEADOWS SUBDIVISION BLOCK 135**
Basesection	**1220x127x762 2,5'**
Order no.	**251349_CBMH114_A**
Order Date	**01-10-2025**
Weight kg	**2329 kg**

Center of gravity	317
EPS raw height	481,5
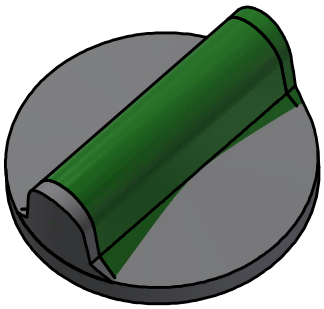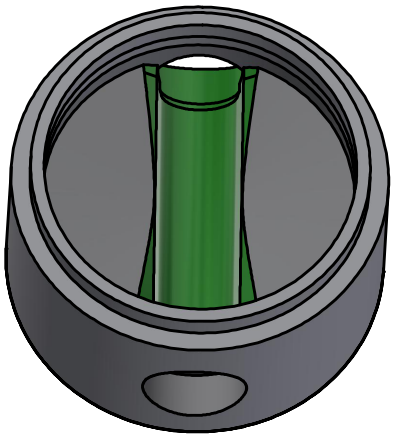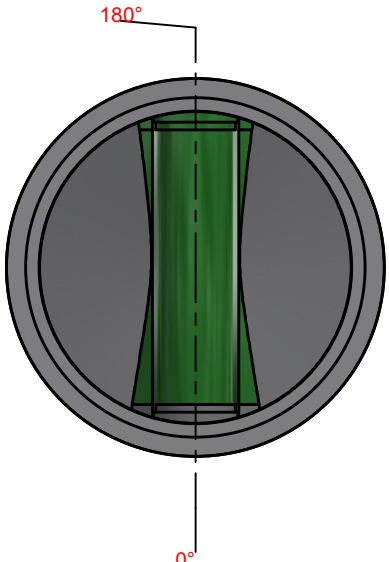
	Main Inlet >	1				
Outlet/Inlet	Outlet	Inlet 1	Inlet 2	Inlet 3	Inlet 4	Inlet 5
Angle 360°	0	180				
Invert Level mm.	0	30				
Connections type	300-12" PVC SDR 35	300-12" PVC SDR 35