Hawkeye Pedershaab
Concrete Technologies Worldwide ™

M CON
PIPE & PRODUCTS INC

2691 Greenfield Road
Ayr, ON N0B 1E0 Canada

Smartcast Basesection Designer. Order/Offer

Customer	G. MELO EXCAVATING LTD
Delivery address	
Project No.	ARLINGTON MEADOWS SUBDIVISION BLOCK 135
EPS Ø x H	1220 / 483

Order no.	251349_MH91A_A
Date.	29-09-2025
Order Date	29-09-2025
Made by	mcon@mcon.com

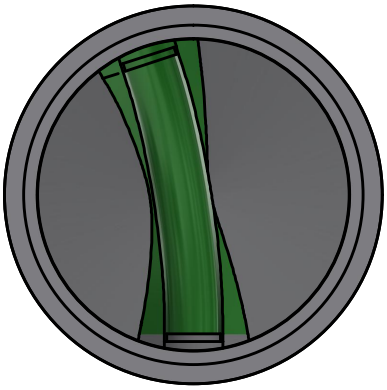

Mould	1220x127x762 2,5'
Basesection	1220x127x762 2,5'
Height mm	870
Bottom inserts mm	152
Benching Height mm	201
Benching Slope 0/00	125
Weight kg	2211 kg

	Main Inlet >	1				
Outlet/Inlet	Outlet	Inlet 1	Inlet 2	Inlet 3	Inlet 4	Inlet 5
Connections type	200-8" PVC SDR 35	200-8" PVC SDR 35				
Gasket type	12-08 PSX	12-08 PSX				
Dimension mm.	201	201				
Angle 360°	0	162				
Invert Level mm.	0	15				
2. Invert Level mm.		15				
Socket angle 0/00						
Channel Drop mm		15				
Straight section mm		50				
Note						

Approved by.	
Control	
Date	

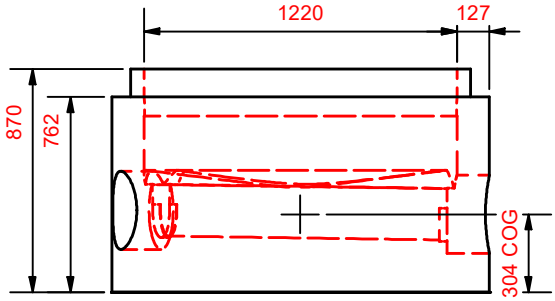

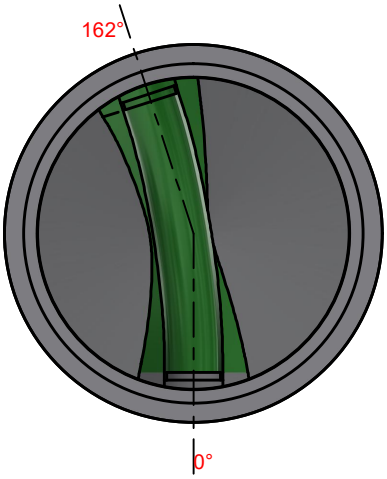

Hawkeye Pedershaab
Concrete Technologies Worldwide ™

M CON
PIPE & PRODUCTS INC

2691 Greenfield Road
Ayr, ON N0B 1E0 Canada

Smartcast Basesection Designer.

Customer	**G. MELO EXCAVATING LTD**
Delivery address	
Project No.	**ARLINGTON MEADOWS SUBDIVISION BLOCK 135**
Basesection	**1220x127x762 2,5'**
Order no.	**251349_MH91A_A**
Order Date	**29-09-2025**
Weight kg	**2211 kg**

Center of gravity	304
EPS raw height	483
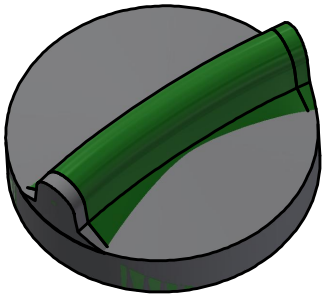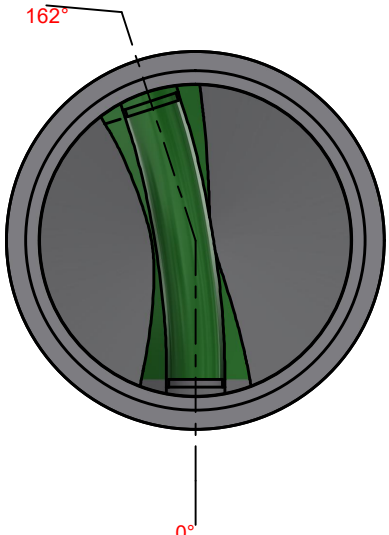
	Main Inlet >	1				
Outlet/Inlet	Outlet	Inlet 1	Inlet 2	Inlet 3	Inlet 4	Inlet 5
Angle 360°	0	162				
Invert Level mm.	0	15				
Connections type	200-8" PVC SDR 35	200-8" PVC SDR 35