Hawkeye Pedershaab
Concrete Technologies Worldwide ™

M CON
PIPE & PRODUCTS INC

2691 Greenfield Road
Ayr, ON N0B 1E0 Canada

Smartcast Basesection Designer. Order/Offer

Customer	MORLEYS CONTRACTING
Delivery address	
Project No.	1 GALILEO BOULEVARD BRANTFORD
EPS Ø x H	1220 481,5

Order no.	251491_MH03_A
Date.	18-11-2025
Order Date	18-11-2025
Made by	mcon@mcon.com

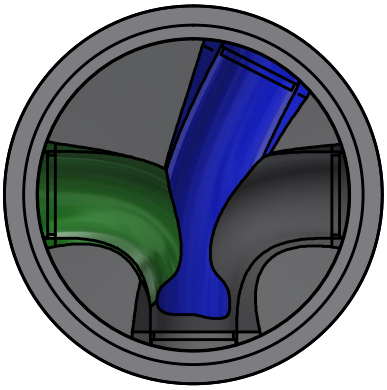

Mould	1220x127x762 2,5'
Basesection	1220x127x762 2,5'
Height mm	870
Bottom inserts mm	152
Benching Height mm	299
Benching Slope 0/00	125
Weight kg	2070 kg

	Main Inlet >			1		
Outlet/Inlet	Outlet	Inlet 1	Inlet 2	Inlet 3	Inlet 4	Inlet 5
Connections type	300-12" PVC SDR 35	300-12" PVC SDR 35	300-12" PVC SDR 35	300-12" PVC SDR 35		
Gasket type	16M PSX	16M PSX	16M PSX	16M PSX		
Dimension mm.	299	299	299	299		
Angle 360°	0	90	207	270		
Invert Level mm.	0	60	30	60		
2. Invert Level mm.		60	30	60		
Socket angle 0/00						
Channel Drop mm		60	30	60		
Straight section mm		50	50	50		
Note						

Approved by.	
Control	
Date	

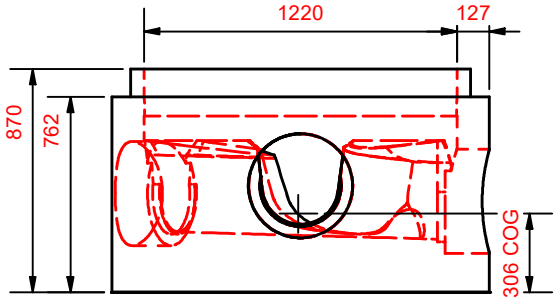

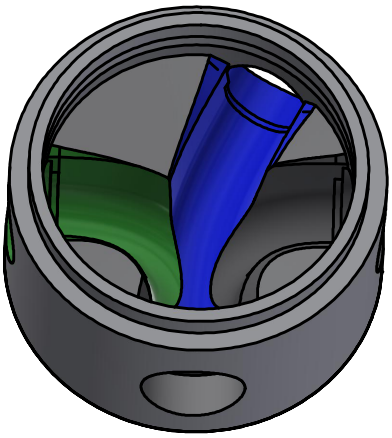

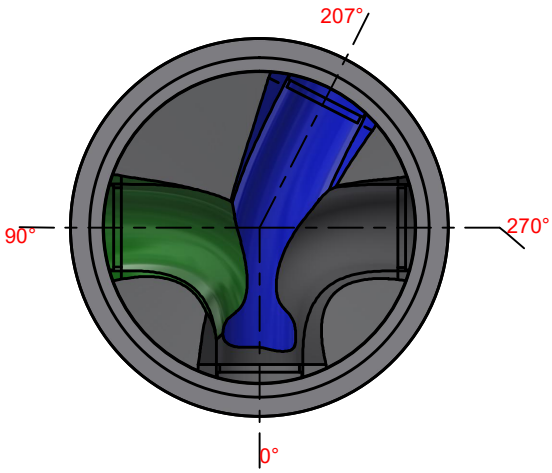

Hawkeye Pedershaab
Concrete Technologies Worldwide ™

M CON
PIPE & PRODUCTS INC

2691 Greenfield Road
Ayr, ON N0B 1E0 Canada

Smartcast Basesection Designer.

Customer	**MORLEYS CONTRACTING**
Delivery address	
Project No.	**1 GALILEO BOULEVARD-BRANTFORD**
Basesection	**1220x127x762 2,5'**
Order no.	**251491_MH03_A**
Order Date	**18-11-2025**
Weight kg	**2070 kg**

Center of gravity	306
EPS raw height	481,5
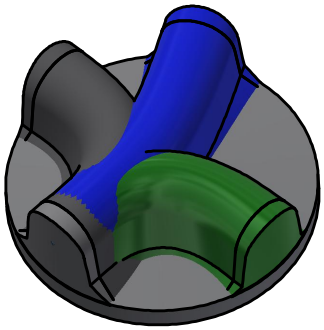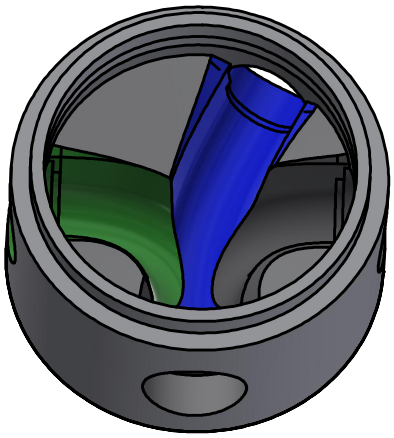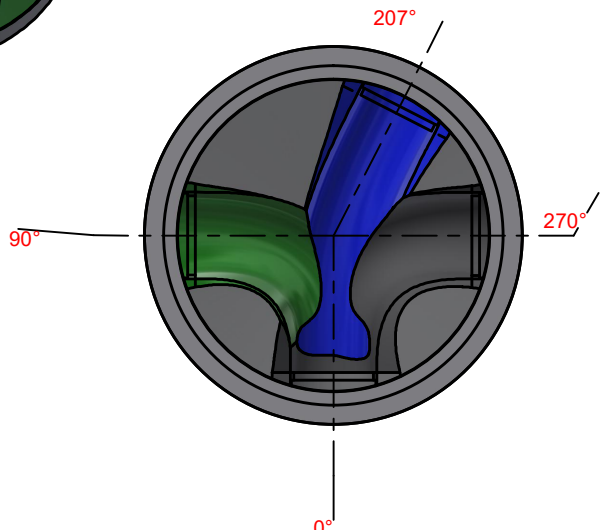
	Main Inlet >			1		
Outlet/Inlet	Outlet	Inlet 1	Inlet 2	Inlet 3	Inlet 4	Inlet 5
Angle 360°	0	90	207	270		
Invert Level mm.	0	60	30	60		
Connections type	300-12" PVC SDR 35	300-12" PVC SDR 35	300-12" PVC SDR 35	300-12" PVC SDR 35