Hawkeye Pedershaab
Concrete Technologies Worldwide ™

M CON
PIPE & PRODUCTS INC

2691 Greenfield Road
Ayr, ON N0B 1E0 Canada

Smartcast Basesection Designer. Order/Offer

Customer	TRISAN CONSTRUCTION
Delivery address	
Project No.	FORESTBROOK HILLS PHASE II SPS
EPS Ø x H	1524 861

Order no.	251520_SPSOVERFLOW_A
Date.	12-02-2026
Order Date	12-02-2026
Made by	mcon@mcon.com

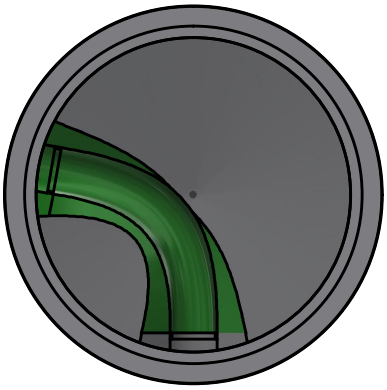

Mould	1524x152x1219 4'
Basesection	1524x152x1219 4'
Height mm	1340
Bottom inserts mm	229
Benching Height mm	201
Benching Slope 0/00	125
Weight kg	4788 kg

	Main Inlet >	1				
Outlet/Inlet	Outlet	Inlet 1	Inlet 2	Inlet 3	Inlet 4	Inlet 5
Connections type	200-8" PVC SDR 35	200-8" PVC SDR 35				
Gasket type	12-08 PSX	12-08 PSX				
Dimension mm.	201	201				
Angle 360°	0	100				
Invert Level mm.	0	30				
2. Invert Level mm.		30				
Socket angle 0/00						
Channel Drop mm		30				
Straight section mm		50				
Note						

Approved by.	
Control	
Date	

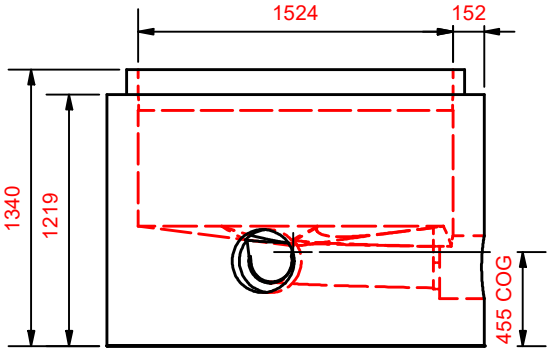

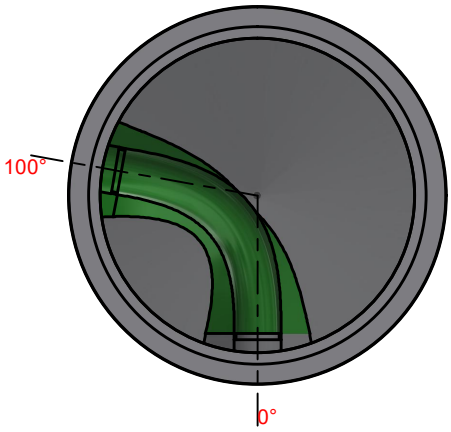

Hawkeye Pedershaab
Concrete Technologies Worldwide ™

M CON
PIPE & PRODUCTS INC

2691 Greenfield Road
Ayr, ON N0B 1E0 Canada

Smartcast Basesection Designer.

Customer	**TRISAN CONSTRUCTION**
Delivery address	
Project No.	**FORESTBROOK HILLS PHASE II SPS**
Basesection	**1524x152x1219 4'**
Order no.	**251520_SPSOVERFLOW_A**
Order Date	**12-02-2026**
Weight kg	**4788 kg**

Center of gravity	455
EPS raw height	861
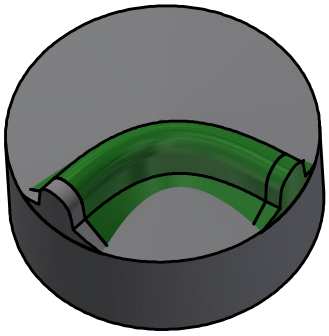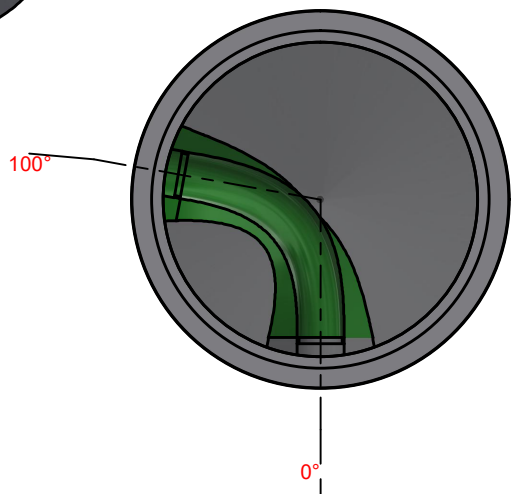
	Main Inlet >	1				
Outlet/Inlet	Outlet	Inlet 1	Inlet 2	Inlet 3	Inlet 4	Inlet 5
Angle 360°	0	100				
Invert Level mm.	0	30				
Connections type	200-8" PVC SDR 35	200-8" PVC SDR 35