Hawkeye Pedershaab
Concrete Technologies Worldwide ™

M CON
PIPE & PRODUCTS INC

2691 Greenfield Road
Ayr, ON N0B 1E0 Canada

Smartcast Basesection Designer. Order/Offer

Customer	NABOLSY CONTRACTING INC
Delivery address	
Project No.	SANITARY SEWER & WTM CONST & ROAD RECONST VARIOUS STREET
EPS Ø x H	1220 / 787,5

Order no.	251525_MH1778938_A
Date.	13-11-2025
Order Date	13-11-2025
Made by	mcon@mcon.com

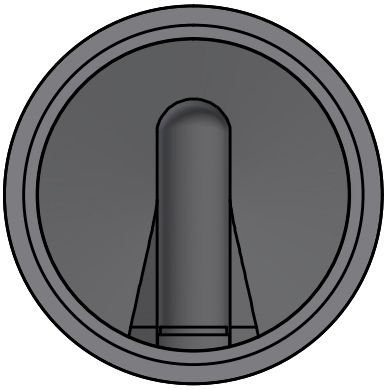

Mould	1220x127x1067 3,5'
Basesection	1220x127x1067 3,5'
Height mm	1175
Bottom inserts mm	152
Benching Height mm	251
Benching Slope 0/00	125
Weight kg	2771 kg

	Main Inlet >					
Outlet/Inlet	Outlet	Inlet 1	Inlet 2	Inlet 3	Inlet 4	Inlet 5
Connections type	250-10" PVC SDR 35					
Gasket type	14M PSX					
Dimension mm.	251					
Angle 360°	0					
Invert Level mm.	0					
2. Invert Level mm.						
Socket angle 0/00						
Channel Drop mm						
Straight section mm						
Note						

Approved by.	
Control	
Date	

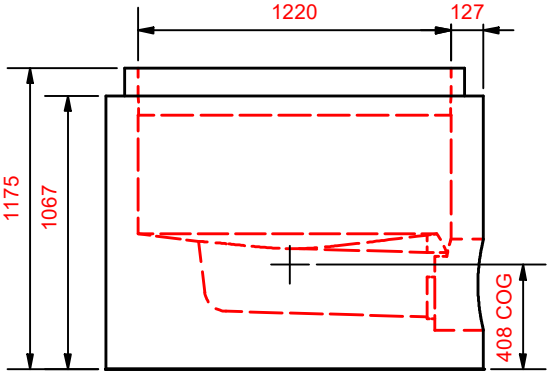

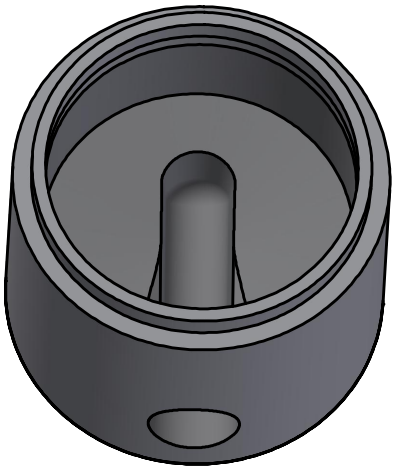

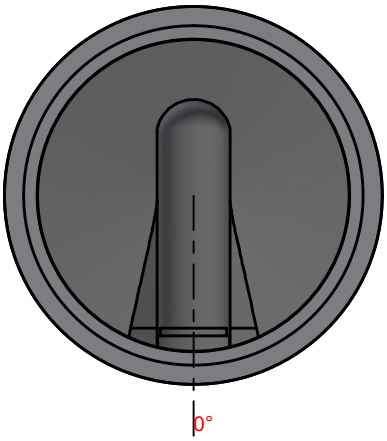

Hawkeye Pedershaab
Concrete Technologies Worldwide ™

M CON
PIPE & PRODUCTS INC

2691 Greenfield Road
Ayr, ON N0B 1E0 Canada

Smartcast Basesection Designer.

Customer	NABOLSY CONTRACTING INC
Delivery address	SANITARY SEWER & WTM
Project No.	CONST & ROAD RECONST
	VARIOUS STREET
Basesection	1220x127x1067 3,5'
Order no.	251525_MH1778938_A
Order Date	13-11-2025
Weight kg	2771 kg

Center of gravity	
EPS raw height	787,5
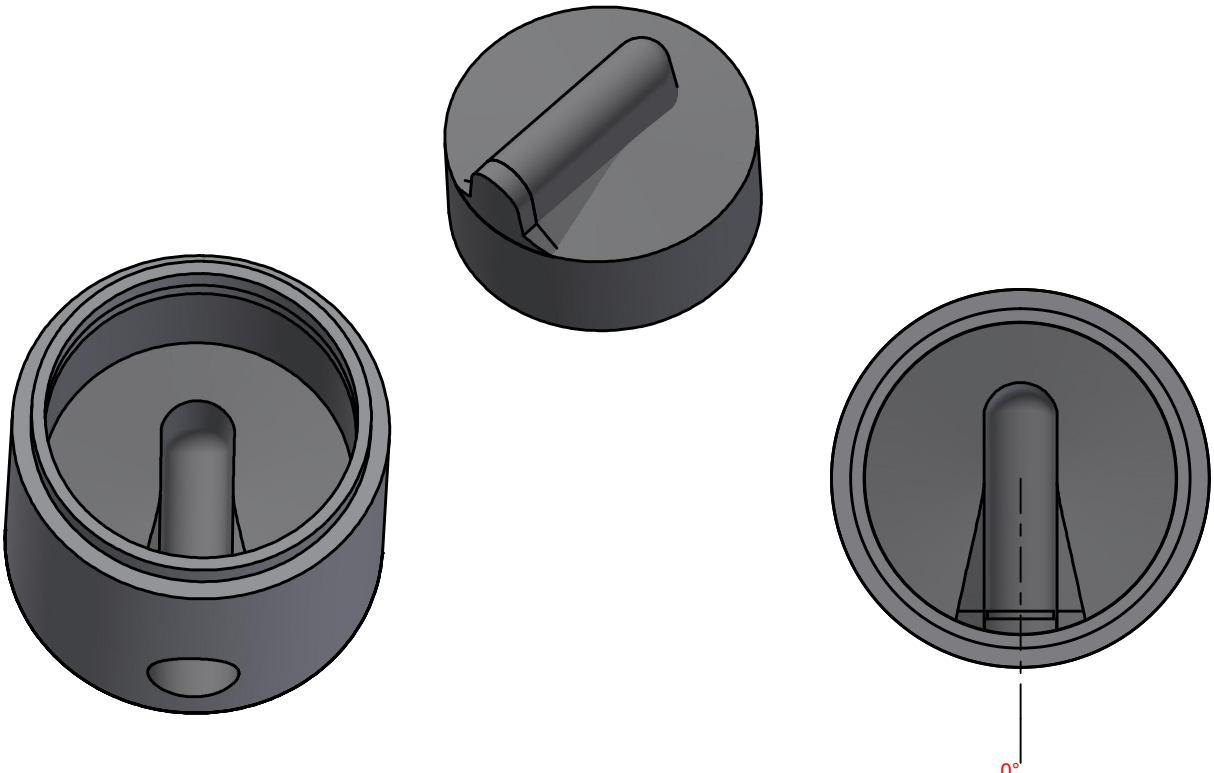
	Main Inlet >					
Outlet/Inlet	Outlet	Inlet 1	Inlet 2	Inlet 3	Inlet 4	Inlet 5
Angle 360°	0					
Invert Level mm.	0					
Connections type	250-10" PVC SDR 35