Hawkeye Pedershaab
Concrete Technologies Worldwide ™

M CON
PIPE & PRODUCTS INC

2691 Greenfield Road
Ayr, ON N0B 1E0 Canada

Smartcast Basesection Designer. Order/Offer

Customer	SOVEREIGN CONSTRUCTION
Delivery address	
Project No.	170 & 174 CULLODEN ROAD PROP COMM DEV PH 4
EPS Ø x H	1220 / 635

Order no.	251580_SMH02_A
Date.	11-11-2025
Order Date	11-11-2025
Made by	mcon@mcon.com

Mould	1220x127x914 3'
Basesection	1220x127x914 3'
Height mm	1022
Bottom inserts mm	152
Benching Height mm	74
Benching Slope 0/00	125
Weight kg	2154 kg

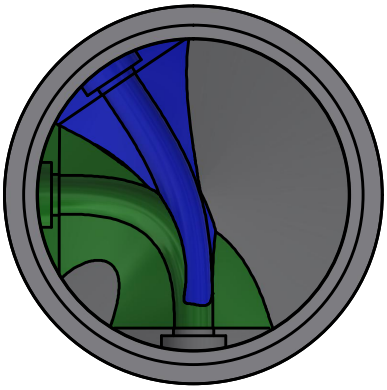

	Main Inlet >	1				
Outlet/Inlet	Outlet	Inlet 1	Inlet 2	Inlet 3	Inlet 4	Inlet 5
Connections type	150-6" PVC SDR 28	150-6" PVC SDR 28	150-6" PVC SDR 28			
Gasket type	10-06 PSX	10-06 PSX	10-06 PSX			
Dimension mm.	150	150	150			
Angle 360°	0	90	146			
Invert Level mm.	0	50	30			
2. Invert Level mm.		50	30			
Socket angle 0/00						
Channel Drop mm		50	30			
Straight section mm		50	50			
Note						

Approved by.	
Control	
Date	

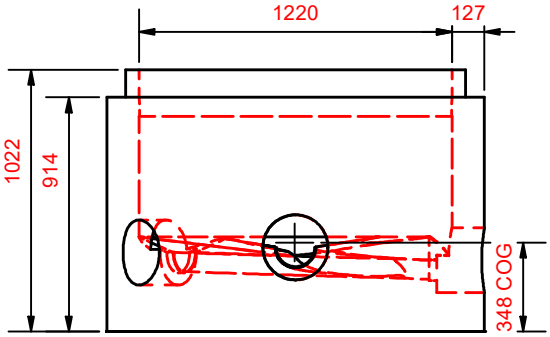

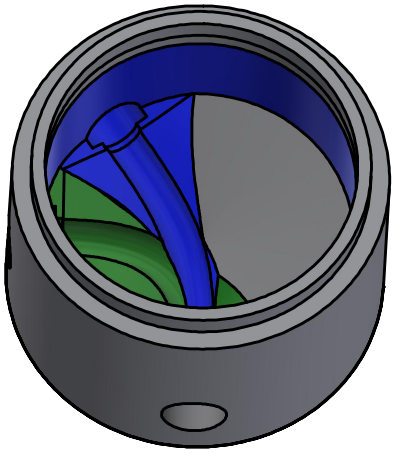

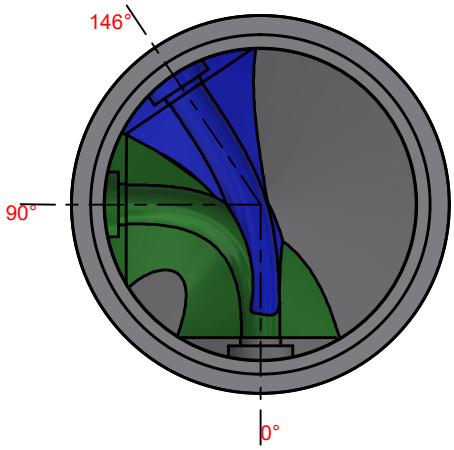

Hawkeye Pedershaab
Concrete Technologies Worldwide ™

M CON
PIPE & PRODUCTS INC

2691 Greenfield Road
Ayr, ON N0B 1E0 Canada

Smartcast Basesection Designer.

Customer	SOVEREIGN CONSTRUCTION
Delivery address	
Project No.	170 & 174 CULLODEN ROAD PROP COMM DEV PH 4
Basesection	1220x127x914 3'
Order no.	251580_SMH02_A
Order Date	11-11-2025
Weight kg	2154 kg

Center of gravity	348
EPS raw height	635
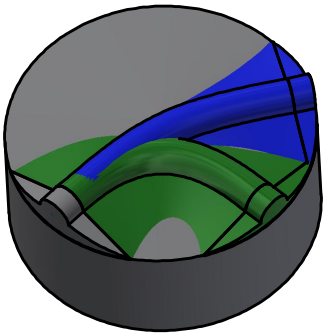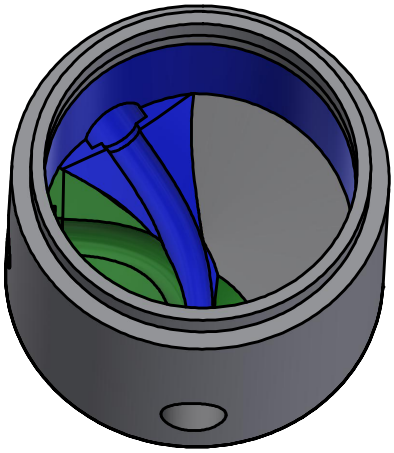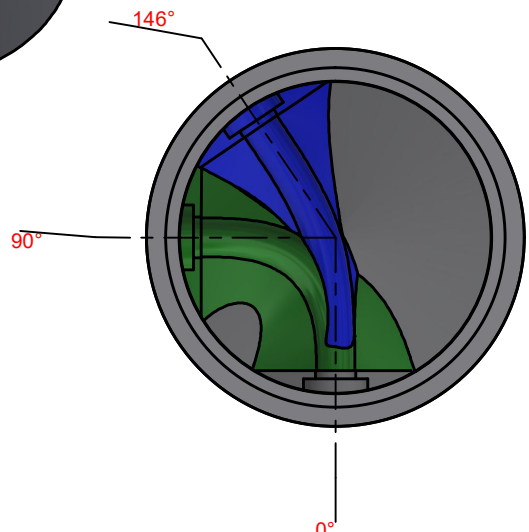
	Main Inlet >	1				
Outlet/Inlet	Outlet	Inlet 1	Inlet 2	Inlet 3	Inlet 4	Inlet 5
Angle 360°	0	90	146			
Invert Level mm.	0	50	30			
Connections type	150-6" PVC SDR 28	150-6" PVC SDR 28	150-6" PVC SDR 28