Hawkeye Pedershaab
Concrete Technologies Worldwide ™

M CON
PIPE & PRODUCTS INC

2691 Greenfield Road
Ayr, ON N0B 1E0 Canada

Smartcast Basesection Designer. Order/Offer

Customer	J-AAR EXCAVATING LIMITED
Delivery address	
Project No.	1070 WILTON GROVE RD
EPS Ø x H	1220 / 788

Order no.	251674_SAN01_A
Date.	04-12-2025
Order Date	04-12-2025
Made by	mcon@mcon.com

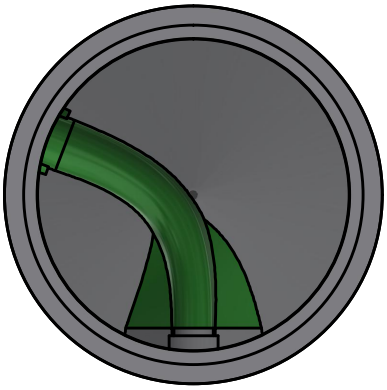

Mould	1220x127x1067 3,5'
Basesection	1220x127x1067 3,5'
Height mm	1175
Bottom inserts mm	152
Benching Height mm	147
Benching Slope 0/00	125
Weight kg	2722 kg

	Main Inlet >	1				
Outlet/Inlet	Outlet	Inlet 1	Inlet 2	Inlet 3	Inlet 4	Inlet 5
Connections type	150-6" PVC SDR 28	200-8" PVC SDR 35				
Gasket type	10-06 PSX	12-08 PSX				
Dimension mm.	150	201				
Angle 360°	0	111				
Invert Level mm.	0	260				
2. Invert Level mm.		150				
Socket angle 0/00						
Channel Drop mm		150				
Straight section mm		50				
Note						

Approved by.	
Control	
Date	

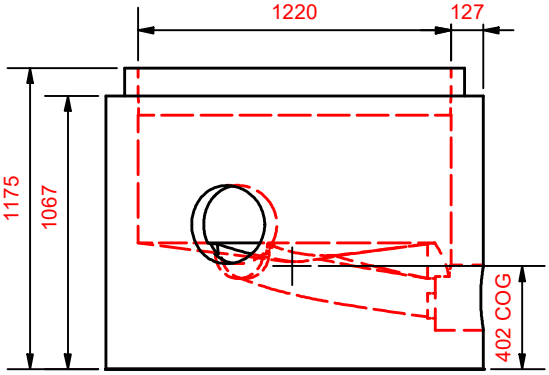

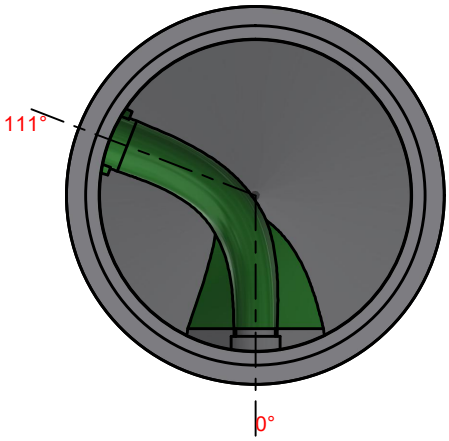

Hawkeye Pedershaab
Concrete Technologies Worldwide ™

M CON
PIPE & PRODUCTS INC

2691 Greenfield Road
Ayr, ON N0B 1E0 Canada

Smartcast Basesection Designer.

Customer	J-AAR EXCAVATING LIMITED
Delivery address	
Project No.	1070 WILTON GROVE RD
Basesection	1220x127x1067 3,5'
Order no.	251674_SAN01_A
Order Date	04-12-2025
Weight kg	2722 kg

Center of gravity	402
EPS raw height	788
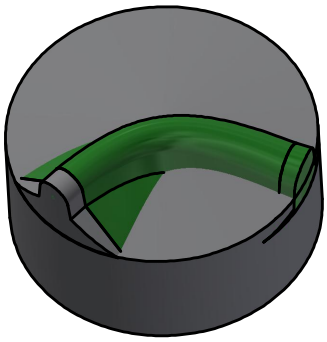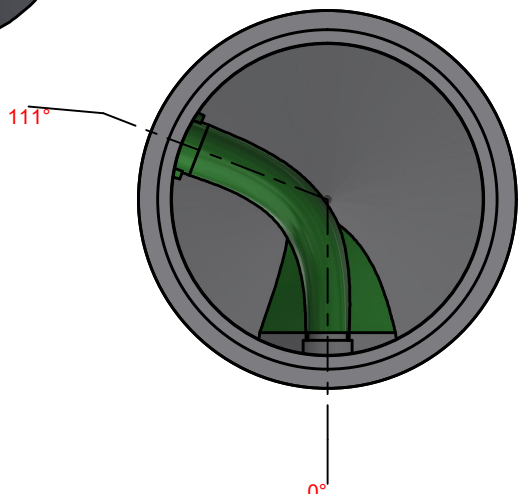
	Main Inlet >	1				
Outlet/Inlet	Outlet	Inlet 1	Inlet 2	Inlet 3	Inlet 4	Inlet 5
Angle 360°	0	111				
Invert Level mm.	0	260				
Connections type	150-6" PVC SDR 28	200-8" PVC SDR 35