Hawkeye Pedershaab
Concrete Technologies Worldwide ™

M CON
PIPE & PRODUCTS INC

2691 Greenfield Road
Ayr, ON N0B 1E0 Canada

Smartcast Basesection Designer. Order/Offer

Customer	NEVAN CONSTRUCTION INC
Delivery address	
Project No.	GARDNER ESTATES DEV
EPS Ø x H	1220 559

Order no.	251692_SAMH01_A
Date.	05-12-2025
Order Date	05-12-2025
Made by	mcon@mcon.com

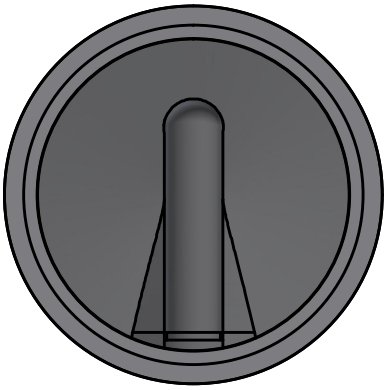

Mould	1220x127x838 2,75'
Basesection	1220x127x838 2,75'
Height mm	946
Bottom inserts mm	152
Benching Height mm	201
Benching Slope 0/00	125
Weight kg	2384 kg

	Main Inlet >					
Outlet/Inlet	Outlet	Inlet 1	Inlet 2	Inlet 3	Inlet 4	Inlet 5
Connections type	200-8" PVC SDR 35					
Gasket type	12-08 PSX					
Dimension mm.	201					
Angle 360°	0					
Invert Level mm.	0					
2. Invert Level mm.						
Socket angle 0/00						
Channel Drop mm						
Straight section mm						
Note						

Approved by.	
Control	
Date	

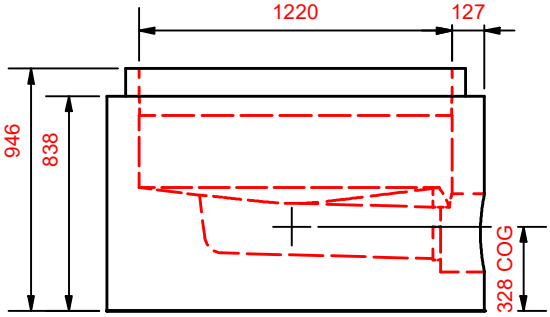

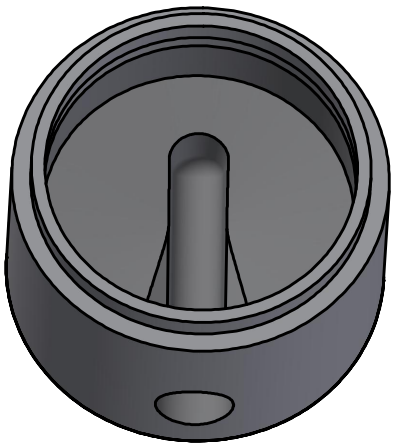

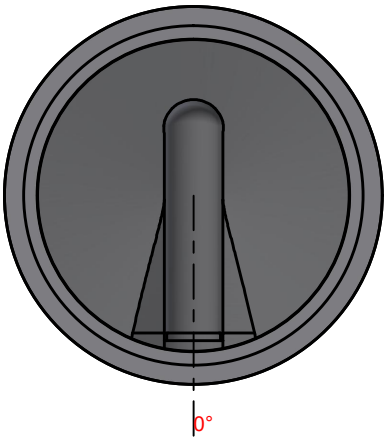

Hawkeye Pedershaab
Concrete Technologies Worldwide ™

M CON
PIPE & PRODUCTS INC

2691 Greenfield Road
Ayr, ON N0B 1E0 Canada

Smartcast Basesection Designer.

Customer	NEVAN CONSTRUCTION INC
Delivery address	
Project No.	GARDNER ESTATES DEV
Basesection	1220x127x838 2,75'
Order no.	251692_SAMH01_A
Order Date	05-12-2025
Weight kg	2384 kg

Center of gravity	
EPS raw height	559
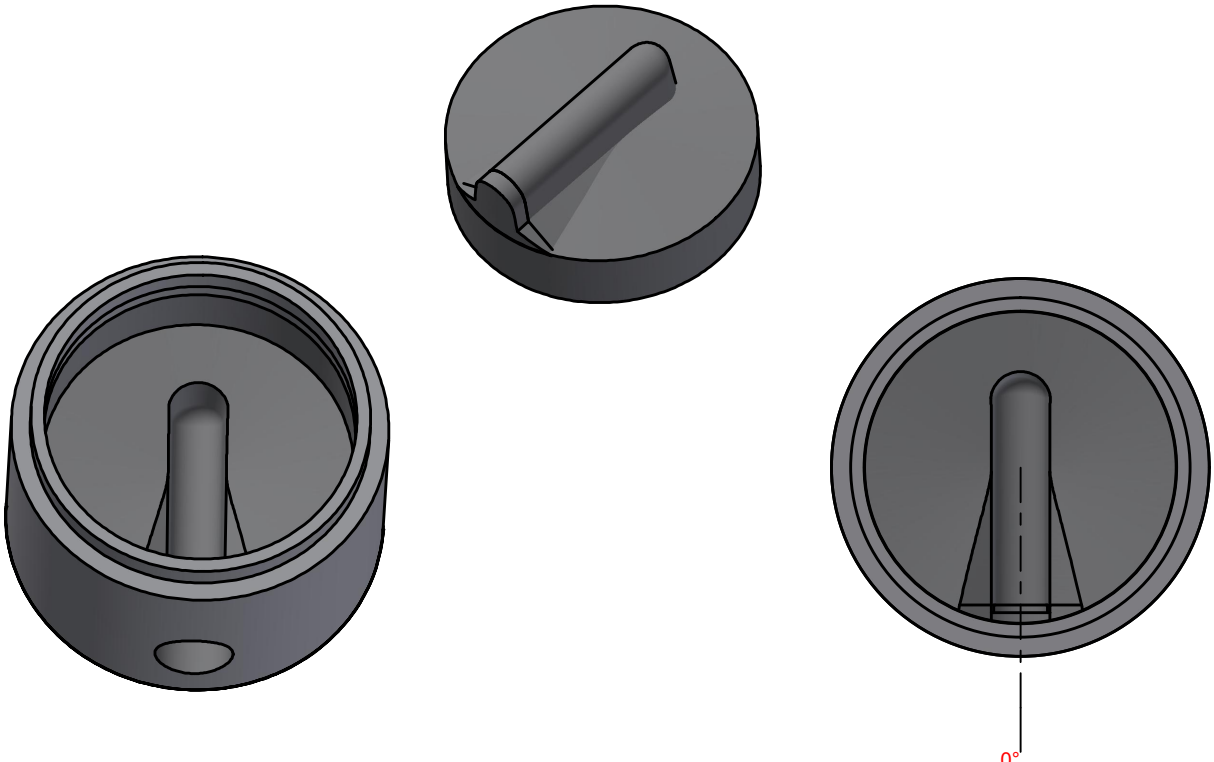
	Main Inlet >					
Outlet/Inlet	Outlet	Inlet 1	Inlet 2	Inlet 3	Inlet 4	Inlet 5
Angle 360°	0					
Invert Level mm.	0					
Connections type	200-8" PVC SDR 35