Hawkeye Pedershaab
Concrete Technologies Worldwide ™

M CON
PIPE & PRODUCTS INC

2691 Greenfield Road
Ayr, ON N0B 1E0 Canada

Smartcast Basesection Designer. Order/Offer

Customer	NELLI CONSTRUCTION
Delivery address	
Project No.	EIGHTH STREET-TORONTO
EPS Ø x H	1220 / 710,5

Order no.	251729_MH1_A
Date.	14-11-2025
Order Date	14-11-2025
Made by	mcon@mcon.com

Mould	1220x127x991 3,25'
Basesection	1220x127x991 3,25'
Height mm	1099
Bottom inserts mm	152
Benching Height mm	299
Benching Slope 0/00	125
Weight kg	2503 kg

	Main Inlet >	1				
Outlet/Inlet	Outlet	Inlet 1	Inlet 2	Inlet 3	Inlet 4	Inlet 5
Connections type	300-12" PVC SDR 35	250-10" PVC SDR 35	300-12" PVC SDR 35			
Gasket type	16M PSX	14M PSX	16M PSX			
Dimension mm.	299	251	299			
Angle 360°	0	90	180			
Invert Level mm.	0	50				
2. Invert Level mm.		50				
Socket angle 0/00						
Channel Drop mm		50				
Straight section mm		50	50			
Note						

Approved by.	
Control	
Date	

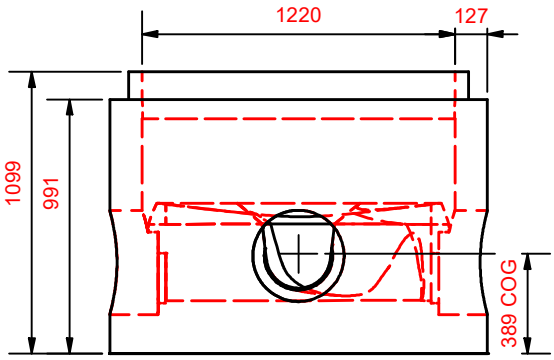

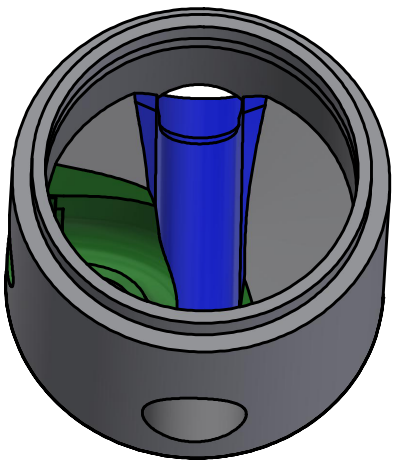

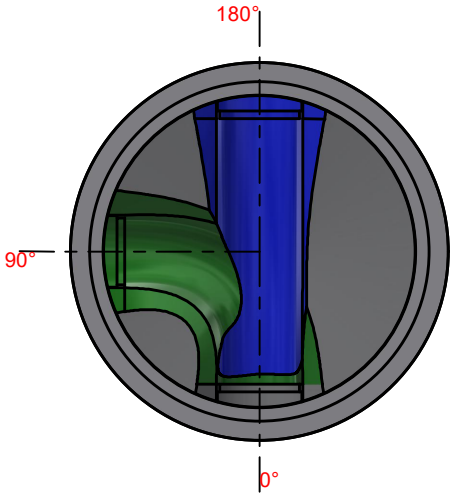

Hawkeye Pedershaab
Concrete Technologies Worldwide ™

M CON
PIPE & PRODUCTS INC

2691 Greenfield Road
Ayr, ON N0B 1E0 Canada

Smartcast Basesection Designer.

Customer	**NELLI CONSTRUCTION**
Delivery address	
Project No.	**EIGHTH STREET-TORONTO**
Basesection	**1220x127x991 3,25'**
Order no.	**251729_MH1_A**
Order Date	**14-11-2025**
Weight kg	**2503 kg**

Center of gravity	389
EPS raw height	710,5
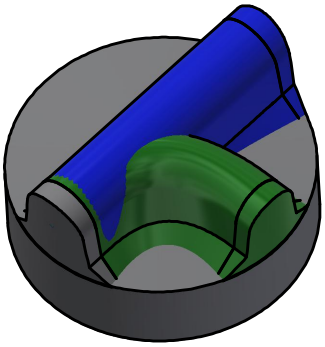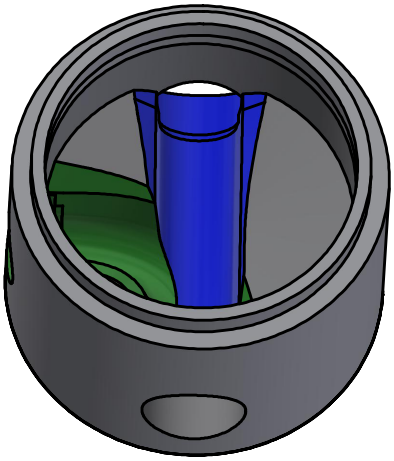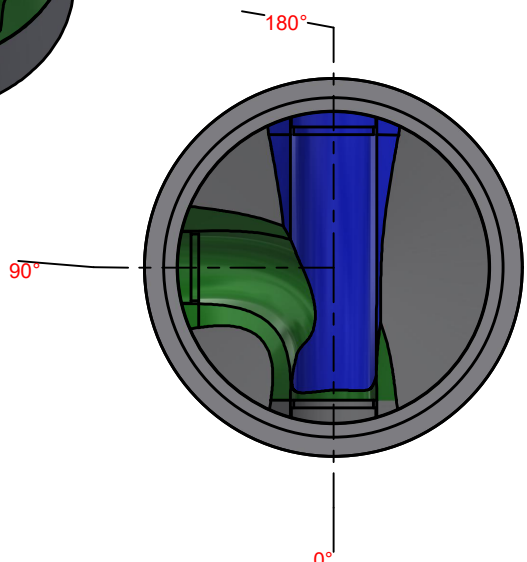
	Main Inlet >	1				
Outlet/Inlet	Outlet	Inlet 1	Inlet 2	Inlet 3	Inlet 4	Inlet 5
Angle 360°	0	90	180			
Invert Level mm.	0	50				
Connections type	300-12" PVC SDR 35	250-10" PVC SDR 35	300-12" PVC SDR 35