Hawkeye Pedershaab
Concrete Technologies Worldwide ™

M CON
PIPE & PRODUCTS INC

2691 Greenfield Road
Ayr, ON N0B 1E0 Canada

Smartcast Basesection Designer. Order/Offer

Customer	TRENCHLINE & ROADS INC
Delivery address	GRAND NIAGARA
Project No.	RESIDENTIAL SUBDIVISION PHASE 1
EPS Ø x H	1220 / 710,5

Order no.	251806_MH01A_A
Date.	12-02-2026
Order Date	12-02-2026
Made by	mcon@mcon.com

Mould	1220x127x991 3,25'
Basesection	1220x127x991 3,25'
Height mm	1099
Bottom inserts mm	152
Benching Height mm	150
Benching Slope 0/00	125
Weight kg	2379 kg

	Main Inlet >	1				
Outlet/Inlet	Outlet	Inlet 1	Inlet 2	Inlet 3	Inlet 4	Inlet 5
Connections type	300-12" PVC SDR 35	300-12" PVC SDR 35				
Gasket type	16M PSX	16M PSX				
Dimension mm.	299	299				
Angle 360°	0	220				
Invert Level mm.	0	60				
2. Invert Level mm.		60				
Socket angle 0/00						
Channel Drop mm		60				
Straight section mm		50				
Note						

Approved by.	
Control	
Date	

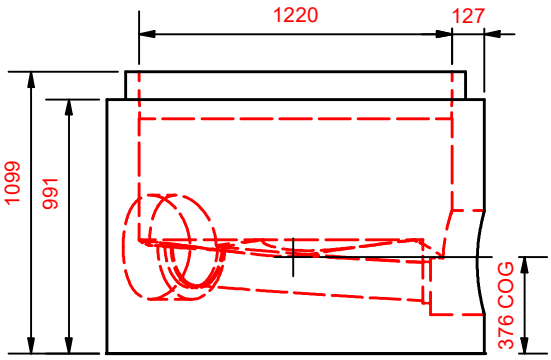

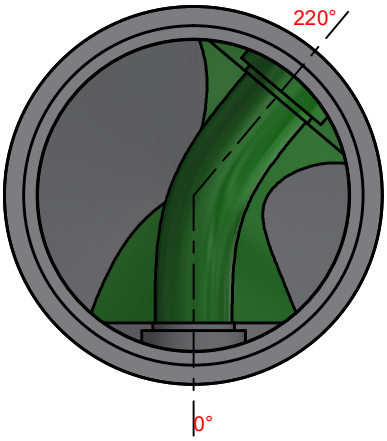

Hawkeye Pedershaab
Concrete Technologies Worldwide ™

M CON
PIPE & PRODUCTS INC

2691 Greenfield Road
Ayr, ON N0B 1E0 Canada

Smartcast Basesection Designer.

Customer	TRENCHLINE & ROADS INC
Delivery address	GRAND NIAGARA
Project No.	RESIDENTIAL SUBDIVISION
	PHASE 1
Basesection	1220x127x991 3,25'
Order no.	251806_MH01A_A
Order Date	12-02-2026
Weight kg	2379 kg

Center of gravity	376
EPS raw height	710,5
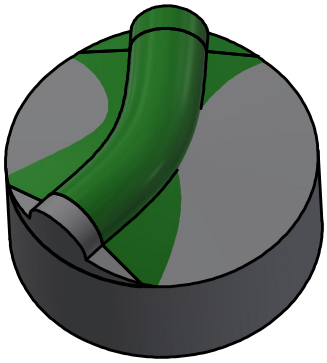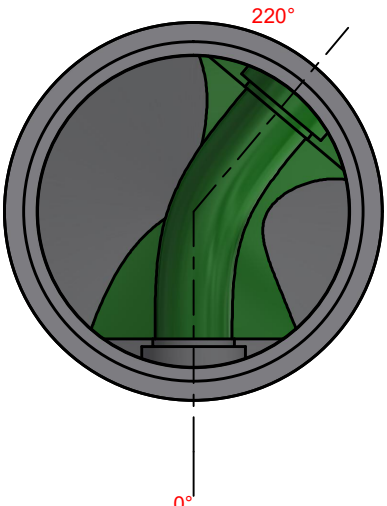
	Main Inlet >	1				
Outlet/Inlet	Outlet	Inlet 1	Inlet 2	Inlet 3	Inlet 4	Inlet 5
Angle 360°	0	220				
Invert Level mm.	0	60				
Connections type	300-12" PVC SDR 35	300-12" PVC SDR 35