Hawkeye Pedershaab
Concrete Technologies Worldwide ™

M CON
PIPE & PRODUCTS INC

2691 Greenfield Road
Ayr, ON N0B 1E0 Canada

Smartcast Basesection Designer. Order/Offer

Customer	TRENCHLINE & ROADS INC
Delivery address	GRAND NIAGARA
Project No.	RESIDENTIAL SUBDIVISION PHASE 1
EPS Ø x H	1220 / 634,5

Order no.	251806_MH04A_A
Date.	12-02-2026
Order Date	12-02-2026
Made by	mcon@mcon.com

Mould	1220x127x914 3'
Basesection	1220x127x914 3'
Height mm	1022
Bottom inserts mm	152
Benching Height mm	126
Benching Slope 0/00	125
Weight kg	2161 kg

	Main Inlet >	1				
Outlet/Inlet	Outlet	Inlet 1	Inlet 2	Inlet 3	Inlet 4	Inlet 5
Connections type	250-10" PVC SDR 35	200-8" PVC SDR 35	250-10" PVC SDR 35			
Gasket type	14M PSX	12-08 PSX	14M PSX			
Dimension mm.	251	201	251			
Angle 360°	0	90	180			
Invert Level mm.	0	50	10			
2. Invert Level mm.		50	10			
Socket angle 0/00						
Channel Drop mm		50	10			
Straight section mm		50	50			
Note						

Approved by.	
Control	
Date	

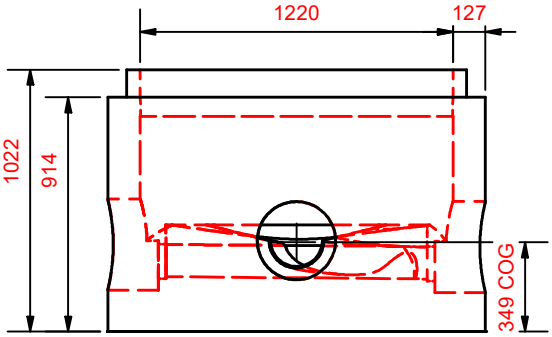

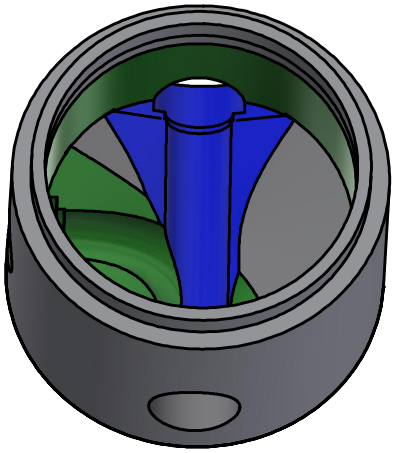

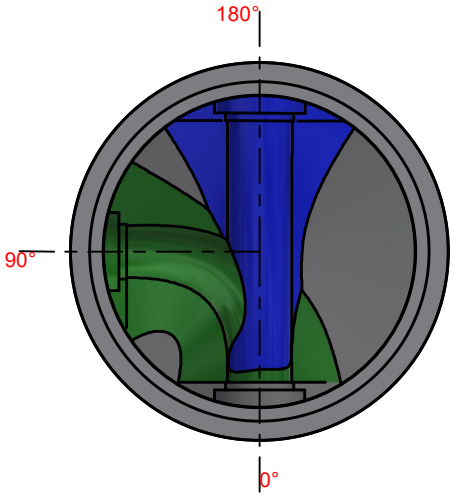

Hawkeye Pedershaab
Concrete Technologies Worldwide ™

M CON
PIPE & PRODUCTS INC

2691 Greenfield Road
Ayr, ON N0B 1E0 Canada

Smartcast Basesection Designer.

Customer	TRENCHLINE & ROADS INC
Delivery address	GRAND NIAGARA
Project No.	RESIDENTIAL SUBDIVISION
	PHASE 1
Basesection	1220x127x914 3'
Order no.	251806_MH04A_A
Order Date	12-02-2026
Weight kg	2161 kg

Center of gravity	349
EPS raw height	634,5
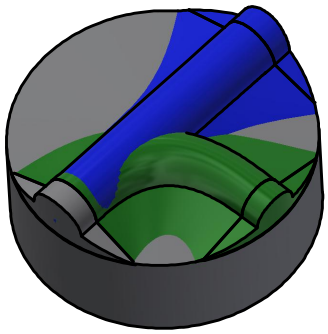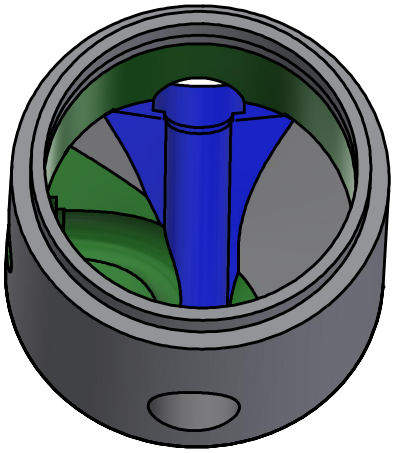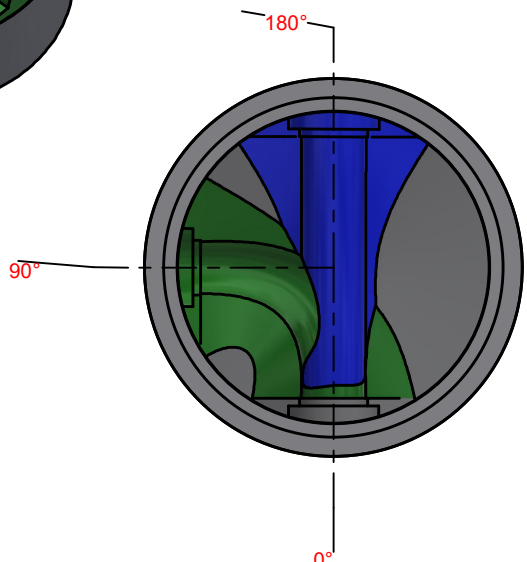
	Main Inlet >	1				
Outlet/Inlet	Outlet	Inlet 1	Inlet 2	Inlet 3	Inlet 4	Inlet 5
Angle 360°	0	90	180			
Invert Level mm.	0	50	10			
Connections type	250-10" PVC SDR 35	200-8" PVC SDR 35	250-10" PVC SDR 35