Hawkeye Pedershaab
Concrete Technologies Worldwide ™

M CON
PIPE & PRODUCTS INC

2691 Greenfield Road
Ayr, ON N0B 1E0 Canada

Smartcast Basesection Designer. Order/Offer

Customer	TRENCHLINE & ROADS INC
Delivery address	GRAND NIAGARA
Project No.	RESIDENTIAL SUBDIVISION PHASE 1
EPS Ø x H	1220 712

Order no.	251806_MH13A_A
Date.	23-02-2026
Order Date	23-02-2026
Made by	mcon@mcon.com

Mould	1220x127x991 3,25'
Basesection	1220x127x991 3,25'
Height mm	1099
Bottom inserts mm	152
Benching Height mm	201
Benching Slope 0/00	125
Weight kg	2577 kg

	Main Inlet >	1				
Outlet/Inlet	Outlet	Inlet 1	Inlet 2	Inlet 3	Inlet 4	Inlet 5
Connections type	200-8" PVC SDR 35	200-8" PVC SDR 35	200-8" PVC SDR 35			
Gasket type	12-08 PSX	12-08 PSX	12-08 PSX			
Dimension mm.	201	201	201			
Angle 360°	0	90	180			
Invert Level mm.	0	340	10			
2. Invert Level mm.		150	10			
Socket angle 0/00						
Channel Drop mm		150	10			
Straight section mm		50	50			
Note						

Approved by.	
Control	
Date	

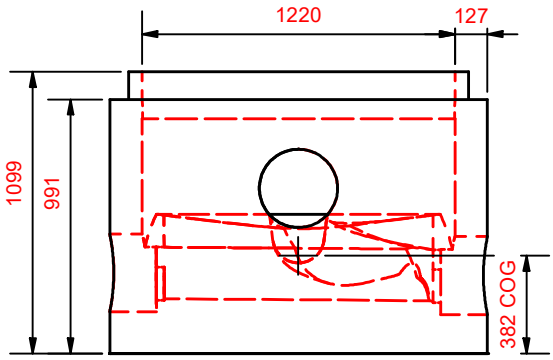

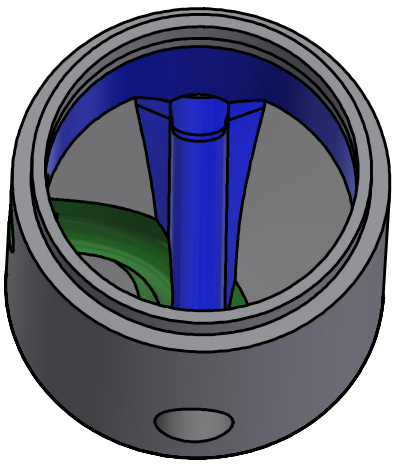

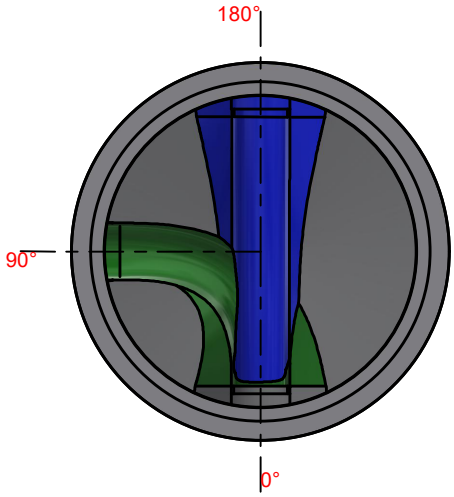

Hawkeye Pedershaab
Concrete Technologies Worldwide ™

M CON
PIPE & PRODUCTS INC

2691 Greenfield Road
Ayr, ON N0B 1E0 Canada

Smartcast Basesection Designer.

Customer	TRENCHLINE & ROADS INC
Delivery address	GRAND NIAGARA
Project No.	RESIDENTIAL SUBDIVISION
	PHASE 1
Basesection	1220x127x991 3,25'
Order no.	251806_MH13A_A
Order Date	23-02-2026
Weight kg	2577 kg

Center of gravity	382
EPS raw height	712
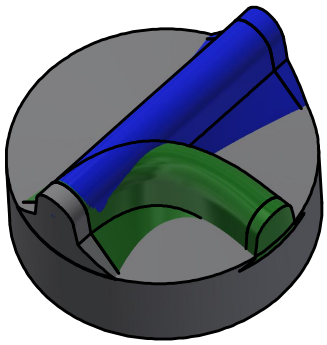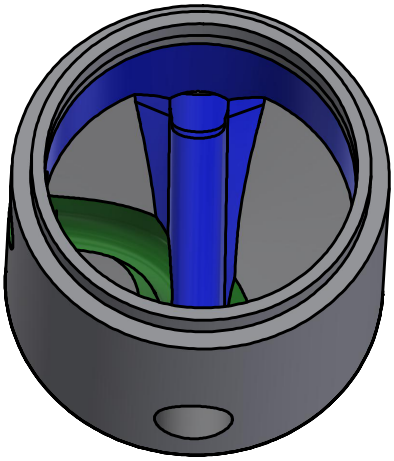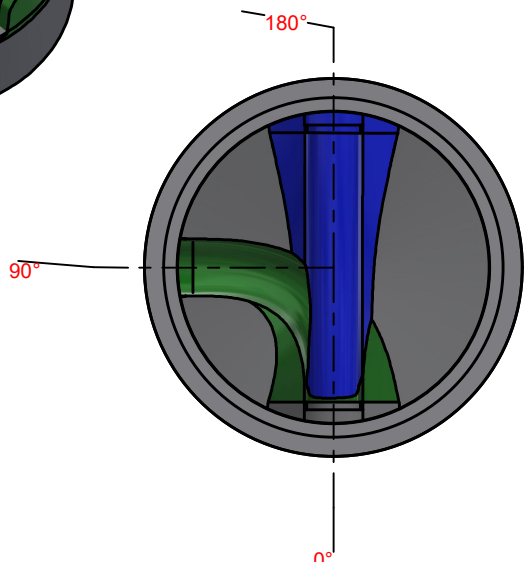
	Main Inlet >	1				
Outlet/Inlet	Outlet	Inlet 1	Inlet 2	Inlet 3	Inlet 4	Inlet 5
Angle 360°	0	90	180			
Invert Level mm.	0	340	10			
Connections type	200-8" PVC SDR 35	200-8" PVC SDR 35	200-8" PVC SDR 35