Hawkeye Pedershaab
Concrete Technologies Worldwide ™

M CON
PIPE & PRODUCTS INC

2691 Greenfield Road
Ayr, ON N0B 1E0 Canada

Smartcast Basesection Designer. Order/Offer

Customer	TRENCHLINE & ROADS INC
Delivery address	GRAND NIAGARA
Project No.	RESIDENTIAL SUBDIVISION PHASE 1
EPS Ø x H	1220 558,5

Order no.	251806_MH58A_A
Date.	13-02-2026
Order Date	13-02-2026
Made by	mcon@mcon.com

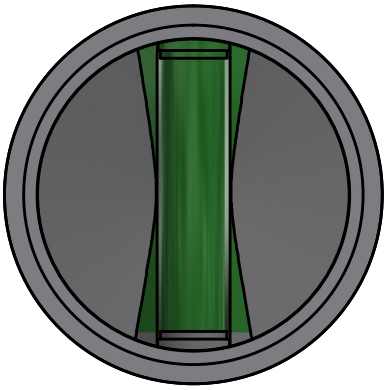

Mould	1220x127x838 2,75'
Basesection	1220x127x838 2,75'
Height mm	946
Bottom inserts mm	152
Benching Height mm	251
Benching Slope 0/00	125
Weight kg	2360 kg

	Main Inlet >	1				
Outlet/Inlet	Outlet	Inlet 1	Inlet 2	Inlet 3	Inlet 4	Inlet 5
Connections type	250-10" PVC SDR 35	250-10" PVC SDR 35				
Gasket type	14M PSX	14M PSX				
Dimension mm.	251	251				
Angle 360°	0	180				
Invert Level mm.	0	10				
2. Invert Level mm.		10				
Socket angle 0/00						
Channel Drop mm		10				
Straight section mm		50				
Note						

Approved by.	
Control	
Date	

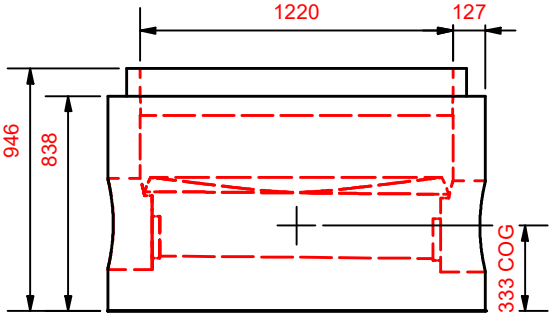

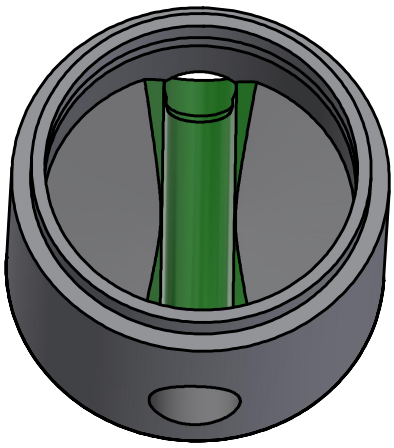

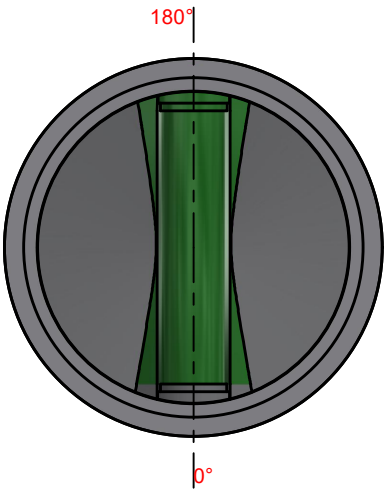

Hawkeye Pedershaab
Concrete Technologies Worldwide ™

M CON
PIPE & PRODUCTS INC

2691 Greenfield Road
Ayr, ON N0B 1E0 Canada

Smartcast Basesection Designer.

Customer	TRENCHLINE & ROADS INC
Delivery address	GRAND NIAGARA
Project No.	RESIDENTIAL SUBDIVISION
	PHASE 1
Basesection	1220x127x838 2,75'
Order no.	251806_MH58A_A
Order Date	13-02-2026
Weight kg	2360 kg

Center of gravity	333
EPS raw height	558,5
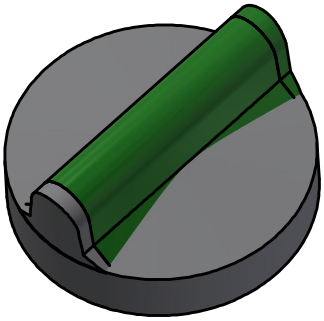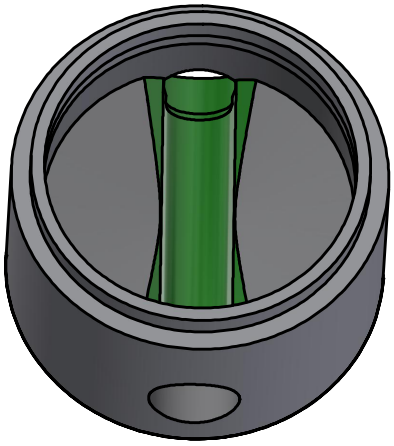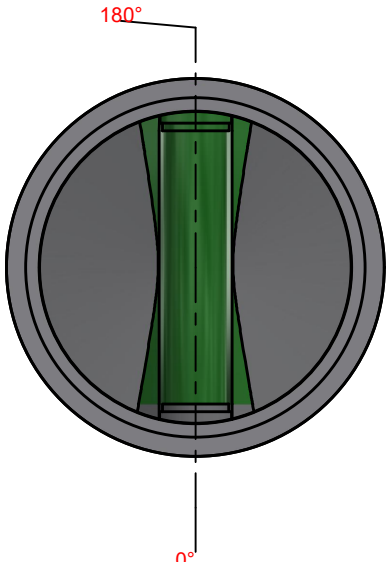
	Main Inlet >	1				
Outlet/Inlet	Outlet	Inlet 1	Inlet 2	Inlet 3	Inlet 4	Inlet 5
Angle 360°	0	180				
Invert Level mm.	0	10				
Connections type	250-10" PVC SDR 35	250-10" PVC SDR 35