Hawkeye Pedershaab
Concrete Technologies Worldwide ™

M CON
PIPE & PRODUCTS INC

2691 Greenfield Road
Ayr, ON N0B 1E0 Canada

Smartcast Basesection Designer. Order/Offer

Customer	J-AAR EXCAVATING LIMITED
Delivery address	
Project No.	SHEDDEN MEADOWS PHASE 1-ST THOMAS
EPS Ø x H	1220 / 712

Order no.	251825_SA36_A
Date.	16-01-2026
Order Date	16-01-2026
Made by	mcon@mcon.com

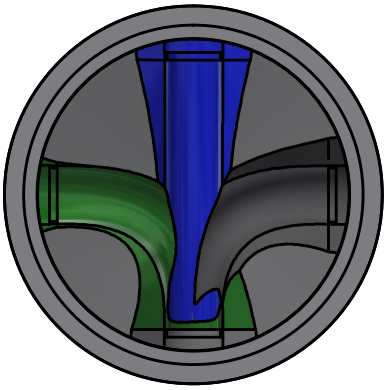

Mould	1220x127x991 3,25'
Basesection	1220x127x991 3,25'
Height mm	1099
Bottom inserts mm	152
Benching Height mm	201
Benching Slope 0/00	125
Weight kg	2431 kg

	Main Inlet >	1				
Outlet/Inlet	Outlet	Inlet 1	Inlet 2	Inlet 3	Inlet 4	Inlet 5
Connections type	200-8" PVC SDR 35	200-8" PVC SDR 35	200-8" PVC SDR 35	200-8" PVC SDR 35		
Gasket type	12-08 PSX	12-08 PSX	12-08 PSX	12-08 PSX		
Dimension mm.	201	201	201	201		
Angle 360°	0	90	180	270		
Invert Level mm.	0	100	30	30		
2. Invert Level mm.		100	30	30		
Socket angle 0/00						
Channel Drop mm		100	30	30		
Straight section mm		50	50	50		
Note						

Approved by.	
Control	
Date	

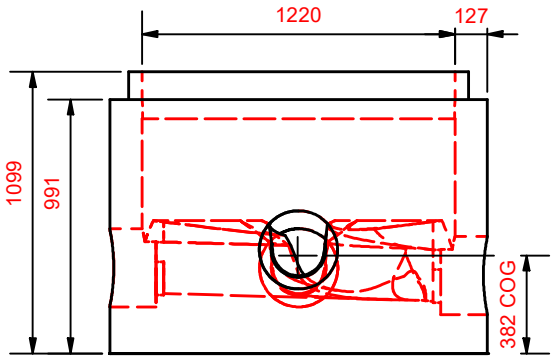

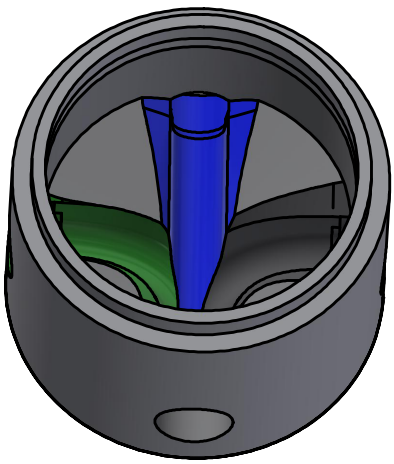

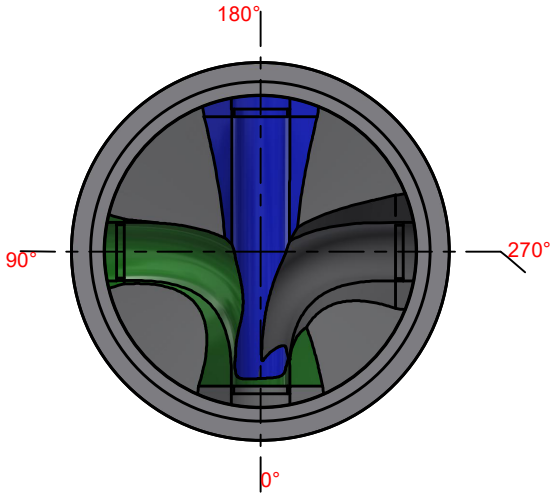

Hawkeye Pedershaab
Concrete Technologies Worldwide ™

M CON
PIPE & PRODUCTS INC

2691 Greenfield Road
Ayr, ON N0B 1E0 Canada

Smartcast Basesection Designer.

Customer	J-AAR EXCAVATING LIMITED
Delivery address	
Project No.	SHEDDEN MEADOWS PHASE 1-ST THOMAS
Basesection	1220x127x991 3,25'
Order no.	251825_SA36_A
Order Date	16-01-2026
Weight kg	2431 kg

Center of gravity	382
EPS raw height	712
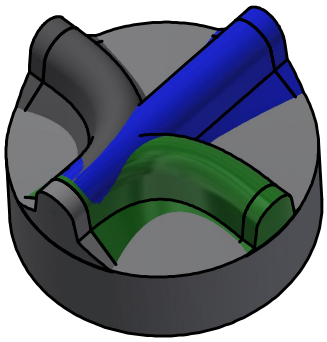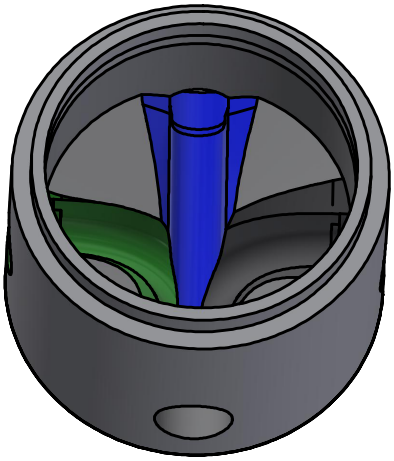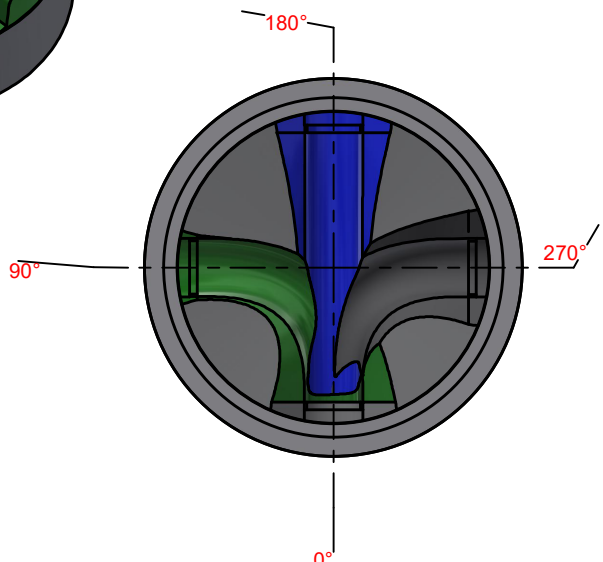
	Main Inlet >	1				
Outlet/Inlet	Outlet	Inlet 1	Inlet 2	Inlet 3	Inlet 4	Inlet 5
Angle 360°	0	90	180	270		
Invert Level mm.	0	100	30	30		
Connections type	200-8" PVC SDR 35	200-8" PVC SDR 35	200-8" PVC SDR 35	200-8" PVC SDR 35