Hawkeye Pedershaab
Concrete Technologies Worldwide ™

M CON
PIPE & PRODUCTS INC

2691 Greenfield Road
Ayr, ON N0B 1E0 Canada

Smartcast Basesection Designer. Order/Offer

Customer	J-AAR EXCAVATING LIMITED
Delivery address	
Project No.	SHEDDEN MEADOWS PHASE 1-ST THOMAS
EPS Ø x H	1220 / 787,5

Order no.	251825_SA38_A
Date.	16-01-2026
Order Date	16-01-2026
Made by	mcon@mcon.com

Mould	1220x127x1067 3,5'
Basesection	1220x127x1067 3,5'
Height mm	1175
Bottom inserts mm	152
Benching Height mm	251
Benching Slope 0/00	125
Weight kg	2654 kg

	Main Inlet >	1				
Outlet/Inlet	Outlet	Inlet 1	Inlet 2	Inlet 3	Inlet 4	Inlet 5
Connections type	250-10" PVC SDR 35	200-8" PVC SDR 35	200-8" PVC SDR 35			
Gasket type	14M PSX	12-08 PSX	12-08 PSX			
Dimension mm.	251	201	201			
Angle 360°	0	180	270			
Invert Level mm.	0	60	50,29			
2. Invert Level mm.		60	50,29			
Socket angle 0/00						
Channel Drop mm		60	50,29			
Straight section mm		50	50			
Note						

Approved by.	
Control	
Date	

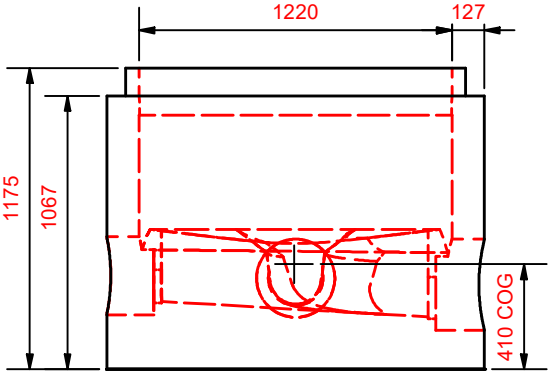

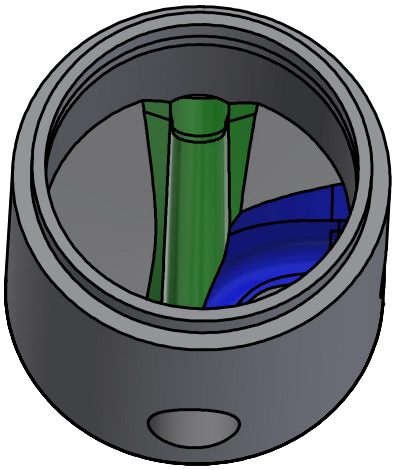

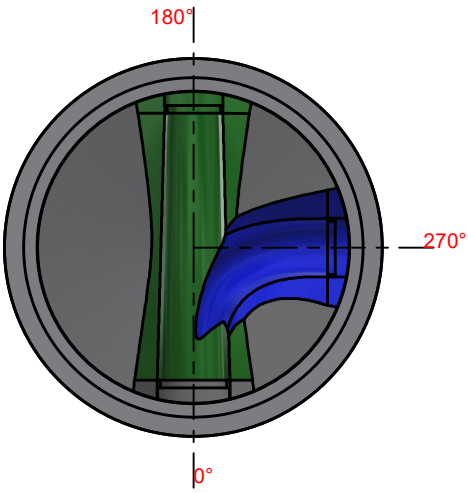

Hawkeye Pedershaab
Concrete Technologies Worldwide ™

M CON
PIPE & PRODUCTS INC

2691 Greenfield Road
Ayr, ON N0B 1E0 Canada

Smartcast Basesection Designer.

Customer	J-AAR EXCAVATING LIMITED
Delivery address	
Project No.	SHEDDEN MEADOWS PHASE 1-ST THOMAS
Basesection	1220x127x1067 3,5'
Order no.	251825_SA38_A
Order Date	16-01-2026
Weight kg	2654 kg

Center of gravity	410
EPS raw height	787,5
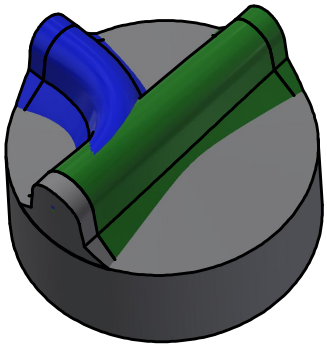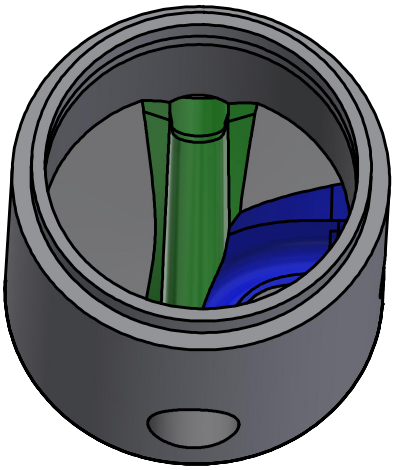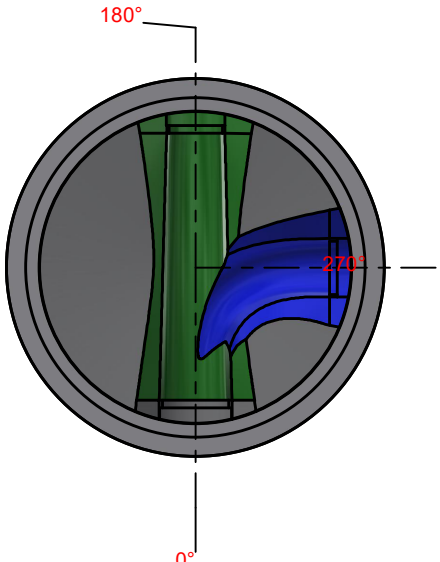
	Main Inlet >	1				
Outlet/Inlet	Outlet	Inlet 1	Inlet 2	Inlet 3	Inlet 4	Inlet 5
Angle 360°	0	180	270			
Invert Level mm.	0	60	50,29			
Connections type	250-10" PVC SDR 35	200-8" PVC SDR 35	200-8" PVC SDR 35