Hawkeye Pedershaab
Concrete Technologies Worldwide ™

M CON
PIPE & PRODUCTS INC

2691 Greenfield Road
Ayr, ON N0B 1E0 Canada

Smartcast Basesection Designer. Order/Offer

Customer	TRISAN CONSTRUCTION
Delivery address	BASEMENT FLOODING
Project No.	PROTECTION PROGRAM PHASE 4 ASSIGMENTS 39-10, 39-11 AND 39-13
EPS Ø x H	1524 / 1002,5

Order no.	25252_PD2_A
Date.	10-09-2025
Order Date	10-09-2025
Made by	mcon@mcon.com

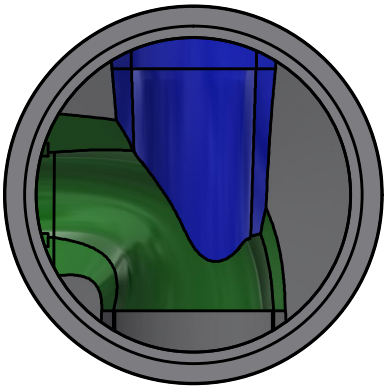

Mould	1524x152x1448 4,75'
Basesection	1524x152x1448 4,75'
Height mm	1569
Bottom inserts mm	229
Benching Height mm	685
Benching Slope 0/00	125
Weight kg	5714 kg

	Main Inlet >	1				
Outlet/Inlet	Outlet	Inlet 1	Inlet 2	Inlet 3	Inlet 4	Inlet 5
Connections type	675-27" Concrete	375-15" PVC SDR 35	525-21" Concrete			
Gasket type	S306-38L	20Y PSX	S306-32			
Dimension mm.	686	366	533			
Angle 360°	0	90	180			
Invert Level mm.	0	350	150			
2. Invert Level mm.		150	150			
Socket angle 0/00						
Channel Drop mm		150	150			
Straight section mm		50	50			
Note						

Approved by.	
Control	
Date	

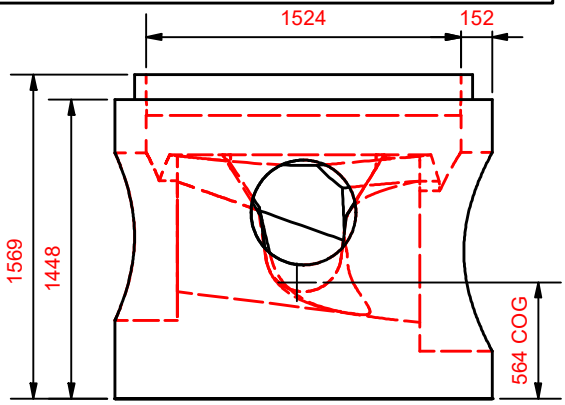

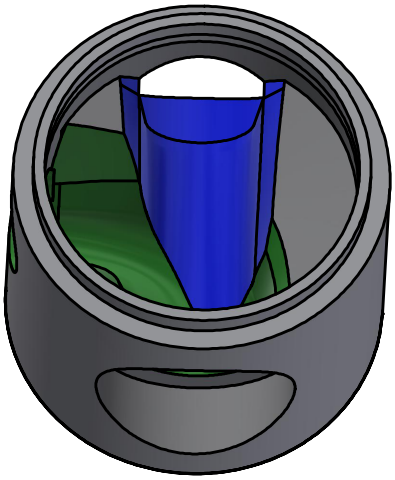

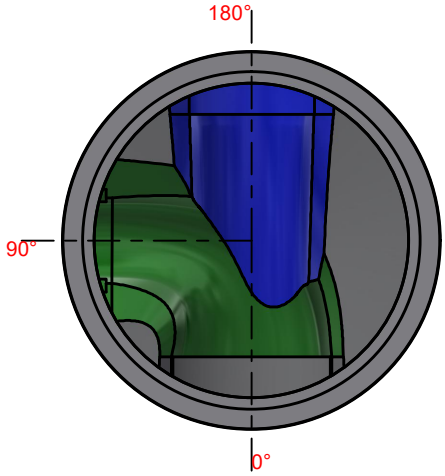

Hawkeye Pedershaab
Concrete Technologies Worldwide ™

M CON
PIPE & PRODUCTS INC

2691 Greenfield Road
Ayr, ON N0B 1E0 Canada

Smartcast Basesection Designer.

Customer	TRISAN CONSTRUCTION
Delivery address	BASEMENT FLOODING PROTECTION PROGRAM PHASE 4 ASSIGMENTS
Project No.	
	39-10, 39-11 AND 39-13
Basesection	1524x152x1448 4,75'
Order no.	25252_PD2_A
Order Date	10-09-2025
Weight kg	5714 kg

Center of gravity	564
EPS raw height	1002,5
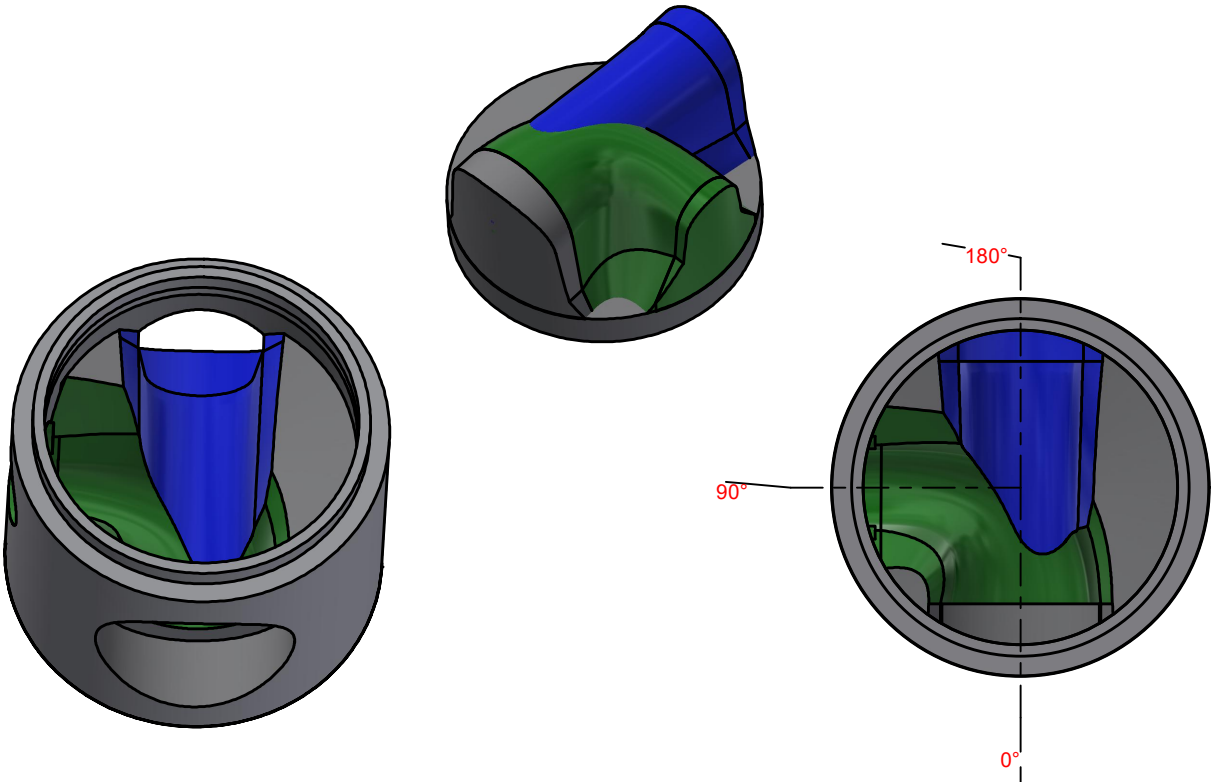
	Main Inlet >	1				
Outlet/Inlet	Outlet	Inlet 1	Inlet 2	Inlet 3	Inlet 4	Inlet 5
Angle 360°	0	90	180			
Invert Level mm.	0	350	150			
Connections type	675-27" Concrete	375-15" PVC SDR 35	525-21" Concrete