Hawkeye Pedershaab
Concrete Technologies Worldwide ™

M CON
PIPE & PRODUCTS INC

2691 Greenfield Road
Ayr, ON N0B 1E0 Canada

Smartcast Basesection Designer. Order/Offer

Customer	TRISAN CONSTRUCTION
Delivery address	BASEMENT FLOODING PROTECTION PROGRAM PHASE 4 ASSIGMENTS 39-10, 39-11 AND 39-13
Project No.	
EPS Ø x H	1524 / 773,5

Order no.	25252_PD3_A
Date.	10-09-2025
Order Date	10-09-2025
Made by	mcon@mcon.com

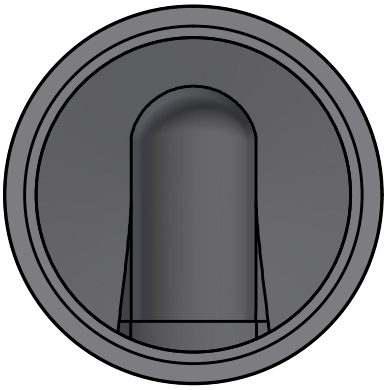

Mould	1524x152x1219 4'
Basesection	1524x152x1219 4'
Height mm	1340
Bottom inserts mm	229
Benching Height mm	533
Benching Slope 0/00	125
Weight kg	5767 kg

	Main Inlet >					
Outlet/Inlet	Outlet	Inlet 1	Inlet 2	Inlet 3	Inlet 4	Inlet 5
Connections type	525-21" Concrete					
Gasket type	S306-32					
Dimension mm.	533					
Angle 360°	0					
Invert Level mm.	0					
2. Invert Level mm.						
Socket angle 0/00						
Channel Drop mm						
Straight section mm						
Note						

Approved by.	
Control	
Date	

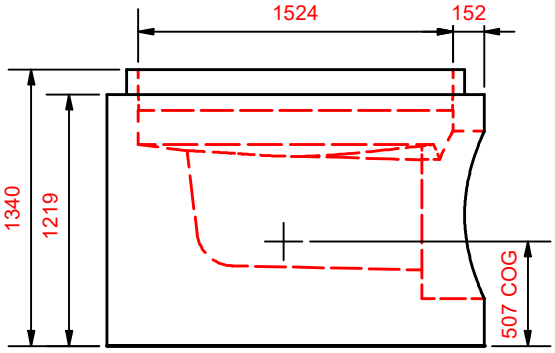

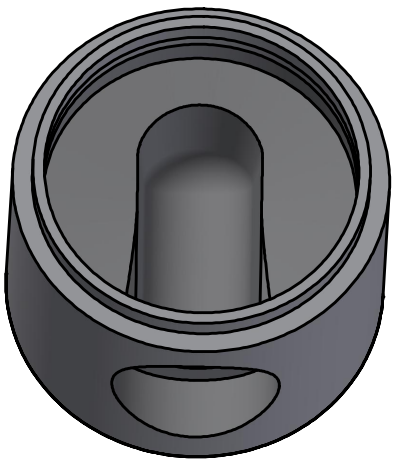

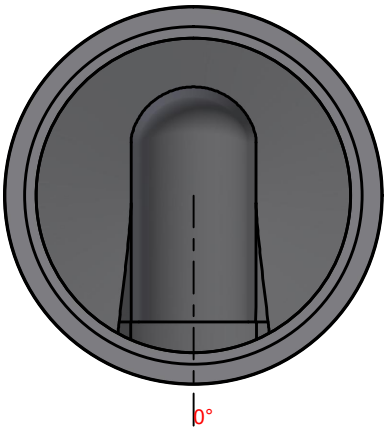

Hawkeye Pedershaab
Concrete Technologies Worldwide ™

M CON
PIPE & PRODUCTS INC

2691 Greenfield Road
Ayr, ON N0B 1E0 Canada

Smartcast Basesection Designer.

Customer	TRISAN CONSTRUCTION
Delivery address	BASEMENT FLOODING PROTECTION PROGRAM PHASE 4 ASSIGMENTS
Project No.	
	39-10, 39-11 AND 39-13
Basesection	1524x152x1219 4'
Order no.	25252_PD3_A
Order Date	10-09-2025
Weight kg	5767 kg

Center of gravity	
EPS raw height	773,5
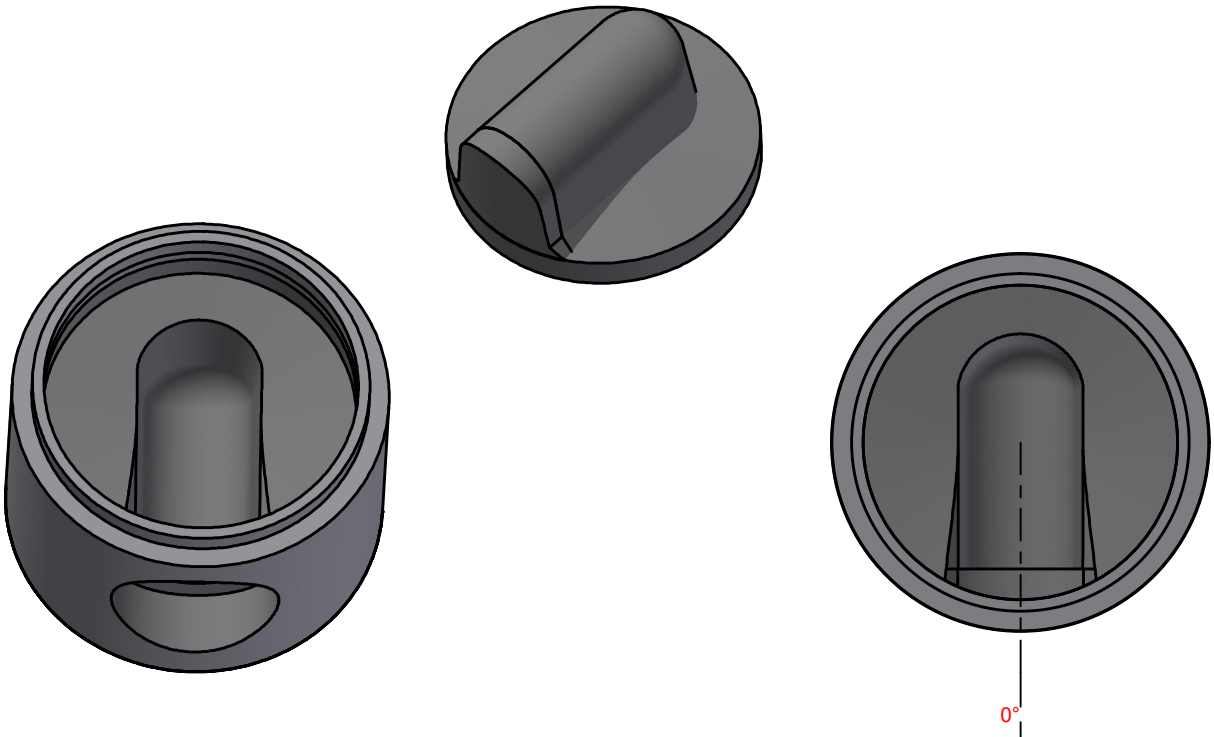
	Main Inlet >					
Outlet/Inlet	Outlet	Inlet 1	Inlet 2	Inlet 3	Inlet 4	Inlet 5
Angle 360°	0					
Invert Level mm.	0					
Connections type	525-21" Concrete