Hawkeye Pedershaab
Concrete Technologies Worldwide ™

M CON
PIPE & PRODUCTS INC

2691 Greenfield Road
Ayr, ON N0B 1E0 Canada

Smartcast Basesection Designer. Order/Offer

Customer	TRISAN CONSTRUCTION
Delivery address	BASEMENT FLOODING PROTECTION PROGRAM PHASE 4 ASSIGMENTS 39-10, 39-11 AND 39-13
Project No.	
EPS Ø x H	1220 845

Order no.	25252_SD1A_A
Date.	11-09-2025
Order Date	11-09-2025
Made by	mcon@mcon.com

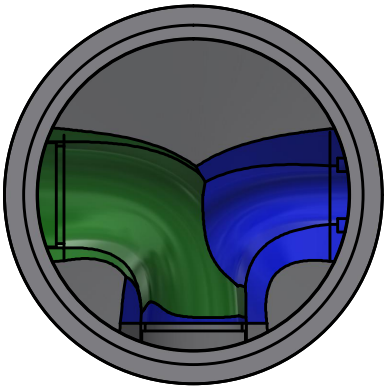

Mould	1220x127x1143 3,75'
Basesection	1220x127x1143 3,75'
Height mm	1251
Bottom inserts mm	152
Benching Height mm	366
Benching Slope 0/00	125
Weight kg	2927 kg

	Main Inlet >		1			
Outlet/Inlet	Outlet	Inlet 1	Inlet 2	Inlet 3	Inlet 4	Inlet 5
Connections type	375-15" PVC SDR 35	375-15" PVC SDR 35	200-8" PVC SDR 35			
Gasket type	20Y PSX	20Y PSX	12-08 PSX			
Dimension mm.	366	366	201			
Angle 360°	0	90	270			
Invert Level mm.	0	60	230			
2. Invert Level mm.		60	150			
Socket angle 0/00						
Channel Drop mm		60	150			
Straight section mm		50	50			
Note						

Approved by.	
Control	
Date	

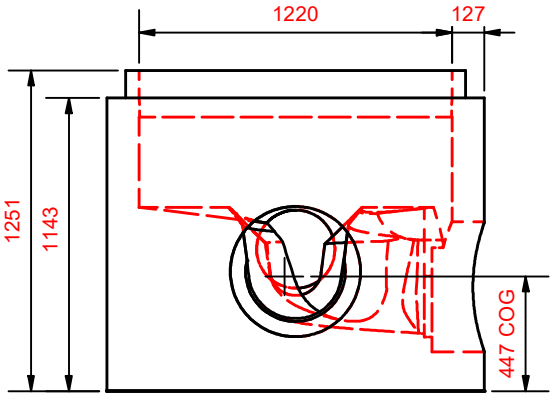

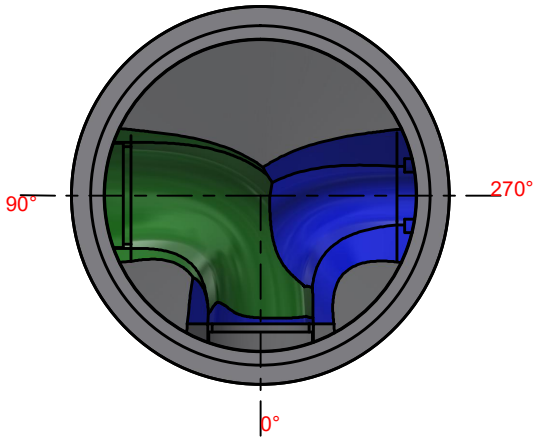

Hawkeye Pedershaab
Concrete Technologies Worldwide ™

M CON
PIPE & PRODUCTS INC

2691 Greenfield Road
Ayr, ON N0B 1E0 Canada

Smartcast Basesection Designer.

Customer	TRISAN CONSTRUCTION
Delivery address	BASEMENT FLOODING PROTECTION PROGRAM PHASE 4 ASSIGMENTS
Project No.	
	39-10, 39-11 AND 39-13
Basesection	1220x127x1143 3,75'
Order no.	25252_SD1A_A
Order Date	11-09-2025
Weight kg	2927 kg

Center of gravity	447
EPS raw height	845
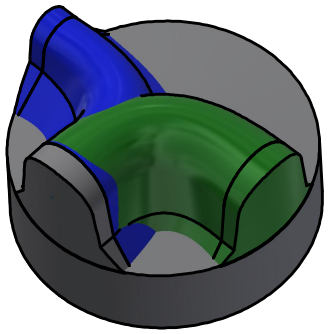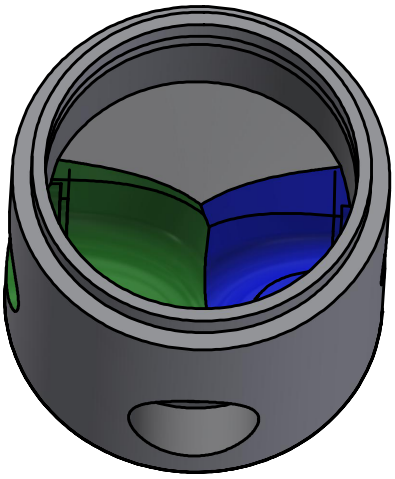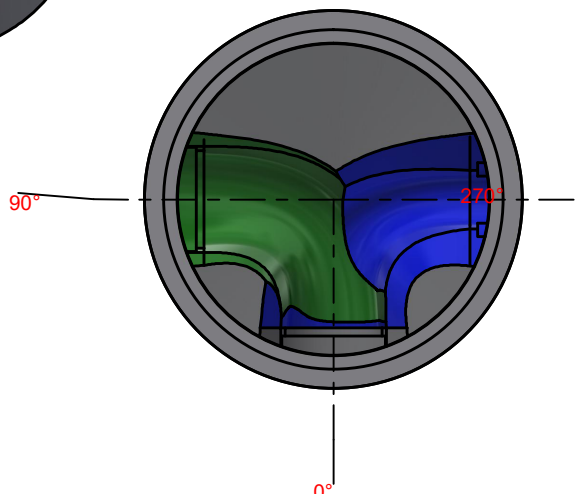
	Main Inlet >		1			
Outlet/Inlet	Outlet	Inlet 1	Inlet 2	Inlet 3	Inlet 4	Inlet 5
Angle 360°	0	90	270			
Invert Level mm.	0	60	230			
Connections type	375-15" PVC SDR 35	375-15" PVC SDR 35	200-8" PVC SDR 35