Hawkeye Pedershaab
Concrete Technologies Worldwide ™

M CON
PIPE & PRODUCTS INC

2691 Greenfield Road
Ayr, ON N0B 1E0 Canada

Smartcast Basesection Designer. Order/Offer

Customer	TRISAN CONSTRUCTION
Delivery address	BASEMENT FLOODING
Project No.	~~PROTECTION PROGRAM PHASE 4 ASSIGMENTS 39-10, 39-11 AND 39-13~~
EPS Ø x H	1220 / 616

Order no.	25252_SD2A_A
Date.	10-09-2025
Order Date	10-09-2025
Made by	mcon@mcon.com

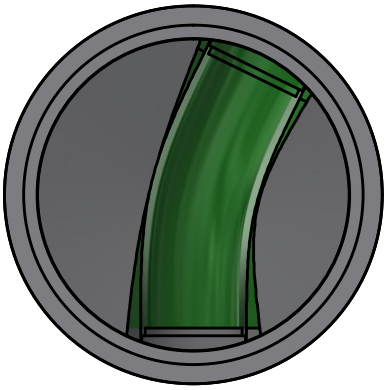

Mould	1220x127x914 3'
Basesection	1220x127x914 3'
Height mm	1022
Bottom inserts mm	152
Benching Height mm	366
Benching Slope 0/00	125
Weight kg	2596 kg

	Main Inlet >	1				
Outlet/Inlet	Outlet	Inlet 1	Inlet 2	Inlet 3	Inlet 4	Inlet 5
Connections type	375-15" PVC SDR 35	375-15" PVC SDR 35				
Gasket type	20Y PSX	20Y PSX				
Dimension mm.	366	366				
Angle 360°	0	206				
Invert Level mm.	0	30				
2. Invert Level mm.		30				
Socket angle 0/00						
Channel Drop mm		30				
Straight section mm		50				
Note						

Approved by.	
Control	
Date	

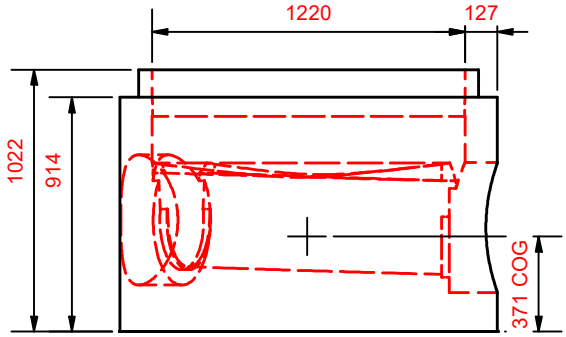

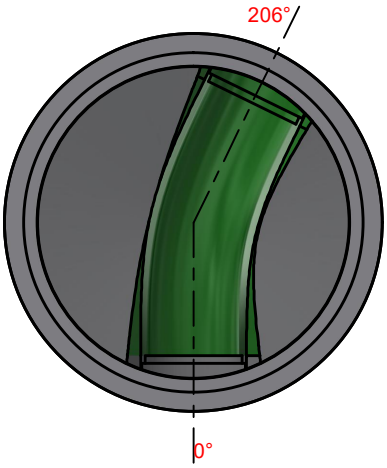

Hawkeye Pedershaab
Concrete Technologies Worldwide ™

M CON
PIPE & PRODUCTS INC

2691 Greenfield Road
Ayr, ON N0B 1E0 Canada

Smartcast Basesection Designer.

Customer	TRISAN CONSTRUCTION
Delivery address	BASEMENT FLOODING PROTECTION PROGRAM PHASE 4 ASSIGMENTS
Project No.	
	39-10, 39-11 AND 39-13
Basesection	1220x127x914 3'
Order no.	25252_SD2A_A
Order Date	10-09-2025
Weight kg	2596 kg

Center of gravity	371
EPS raw height	616
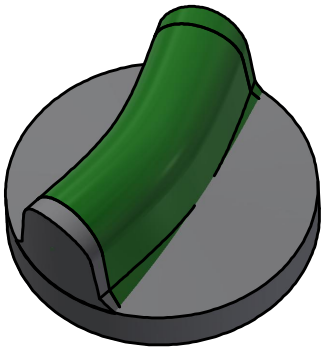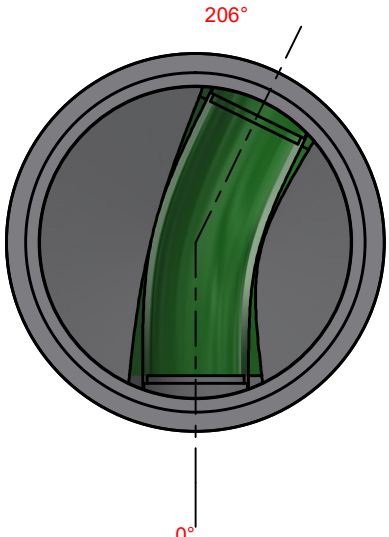
	Main Inlet >	1				
Outlet/Inlet	Outlet	Inlet 1	Inlet 2	Inlet 3	Inlet 4	Inlet 5
Angle 360°	0	206				
Invert Level mm.	0	30				
Connections type	375-15" PVC SDR 35	375-15" PVC SDR 35